PRODUCT SERVICE

SCHEMATIC MANUAL

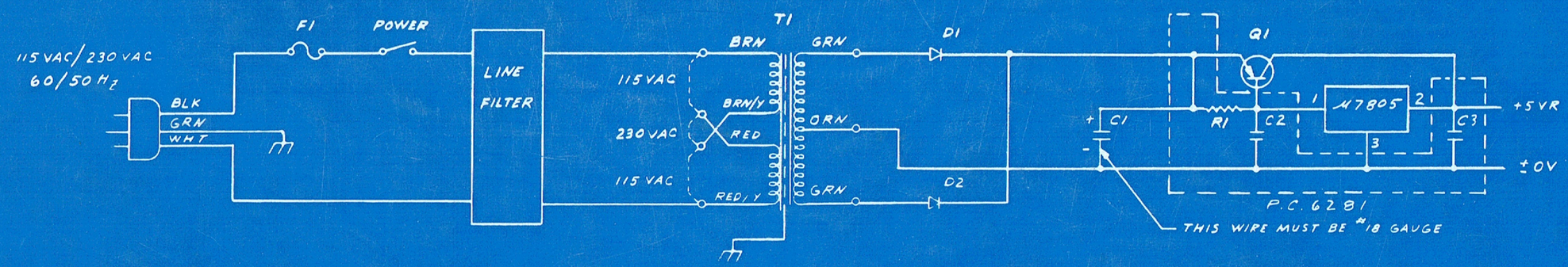

REFERENCE INFORMATION ONLY

NOT CONTROLLED

WANG LABORATORIES, INC.
ONE INDUSTRIAL AVENUE, LOWELL, MASSACHUSETTS 01851, TEL. (617) 851-4111, TWX 710 343-6769, TELEX 94-7421

Printed in U.S.A.

PRODUCT SERVICE

SCHEMATIC MANUAL

© Wang Laboratories, Inc., 1974

This manual contains company proprietary information. Reproduction of this document in whole or in part without the authorized consent of Wang Laboratories, Inc. is prohibited.

WANG LABORATORIES, INC.
836 NORTH STREET, TEWKSBURY, MASSACHUSETTS 01876, TEL (617) 851-4111, TWX 710 343-6769, TELEX 94-7421

03-0019
SCHEMATIC MANUAL

May, 1977

SCHEMATIC MANUAL REPRINT

The original quantity of schematic manuals was exhausted, necessitating a reprint. Because of the bulk of the original manual and the limited use of the first several sections, this reprint only contains the following sections: Model 1200/1222; 2200; PERIPHERALS; and DIABLO SERIES 40 DISK DRIVE. This reprinted manual contains all updates and revisions included in the first three schematic manual addenda.

Printed in U.S.A.

MODEL 1200/1222 SYSTEM

The following schematics are contained in this section in the following order:

TITLE	DRAWING #	NO. OF SHEETS
345	C6405-1	1
L522	D6152	1
L579	E6440	1
F564	D6164	1
6013	C6013	1
6014	C6014	1
6165	6165	5
6170	D6170	1
6171	D6171	1
6172	D6172	1
6173	D6173	1
6174	D6174	1
6174-1	D6174-1	1
6175	D6175	1
6176	D6176	1
6177	D6177	1
6178	D6178	1
6192	D6192	1
6195	D6195	1
6220	E6220	1
6231	D6231	1
6237	E6237	1
6264	D6264, E6264	2
6293	E6293	1
6370	D6370	1
6371	D6371	1
6372	E6372	1
6373	D6373	1
6384	D6384	1
6385	D6385	1
6393	E6393	1

TITLE	DRAWING #	NO. OF SHEETS
6393-1	E6393-1	1
6508	D6508	1
6510	A6510-1	1
6511	B6511-1	1
6512	A6512-1	1
6513	A6513	1
6514	A6514	1
6515	A6515	1
6516	E6516-1	1
6517	D6517	1
6518	E6518-1	1
6519	D6519	1
6520	D6520	1
6523	C6523-1	1
6524	C6524-1	1
6530	E6530-1	1
6536	D6536-1	1
6705	D6705	1
6712	E6712	1
6714	E6714	1
6715	E6715	3
6719	E6719	1
6720	E6720	1
6721	D6721	1
6737	E6737	1
6780	E6780	1
6781	E6781	1
7020	D7020	1
1200 TPWTR WIRING	D5776-975 sht.1	1
1200 C1,2,3 WIRING	D5776-975 sht.3	1
1222 TPWTR WIRING	6497-260	2

REVISIONS
PER ECN 3178 ADDED I.C. CIRCUIT 8-28-72 APP'D SKH

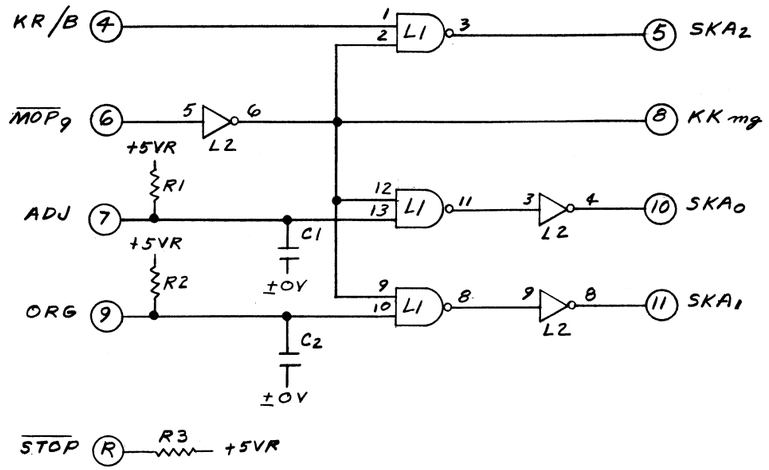

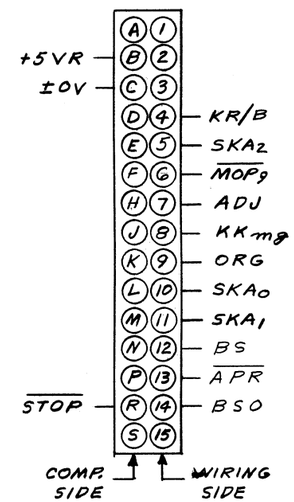

LOCATION	TYPE	W.L. PART NO.	TERM NO. V_{CC} +5VR	TERM. NO. ±0V	QTY
L1	SN7400N	376-0002	14	7	1
L2	SN7404N	376-0010	14	7	1

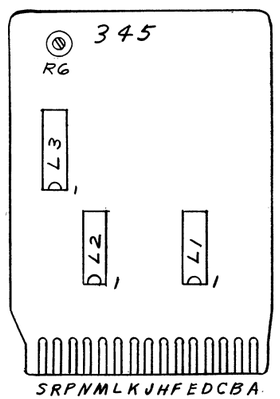

COMP.	SIZE/TYPE	W.L. PART NO.	QTY
R1,2,3,5	10K 1/4W	330-4010	3
R4	1K 1/4W	330-3010	1
C1,2	22 PF	300-1220	2
C3	10 µF 16VDC	300-3006	1
C4	.02 µF	300-1904	1
R6	10K POT	336-1010	1
R7	15K 5% 1/4W	330-4016	1
C5	2.2 µF 5% 35V	300-4027	1
C6	5.6 µF 5% 35V	300-4025	1

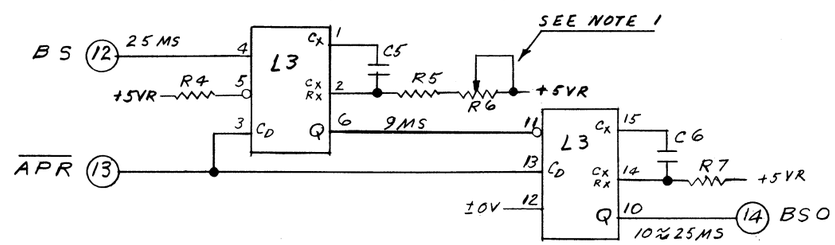

NOTE
1. ADJUST THE 10K POT. FOR 9MS PULSE OUT OF PIN 6

WANG LABORATORIES INC. TEWKSBURY, MASS.				
MODEL NO. 1200	DRAWN	2/16/71	APP.	3/17/72
	CHECKED		APP.	
TITLE SCHEMATIC LOGIBLOC # 345 KEYBOARD CONTROL				
W.O. NO. 510 210-0345	DWG. NO. C 6405-1			REV. 1

DWG. NO. C

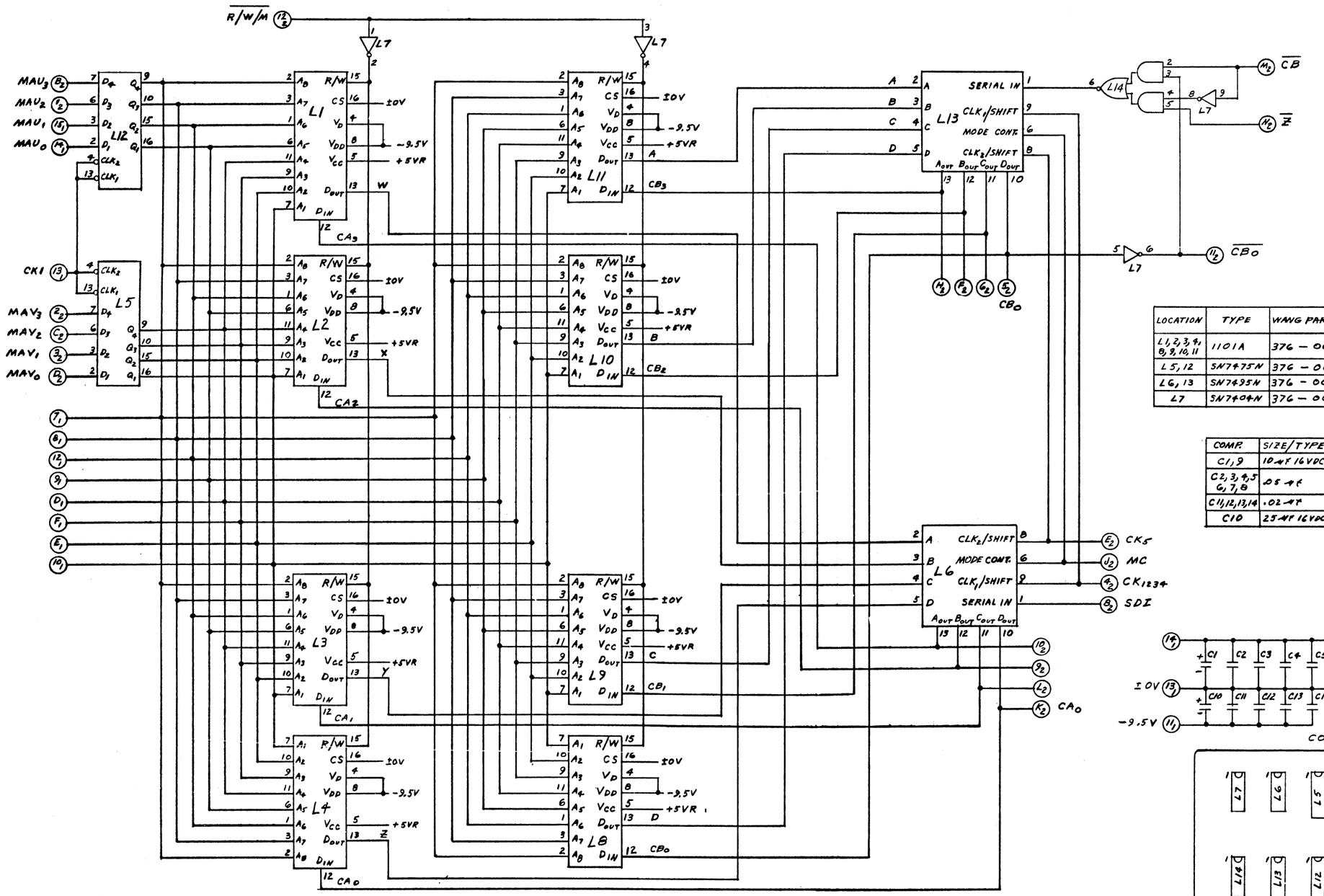

LOCATION	TYPE	WANG PART No.	TERM. No. +5VR V_{CC}	TERM No. ±0V	QTY
L1, 2, 3, 4, 8, 9, 10, 11	1101A	376 – 0000	5	14	8
L5, 12	SN7475N	376 – 0013	5	12	2
L6, 13	SN7495N	376 – 0059	14	7	2
L7	SN7404N	376 – 0010	14	7	1

COMP.	SIZE/TYPE	WANG PART No.	QTY
C1, 9	10 μf 16 VDC	300 – 3006	2
C2, 3, 4, 5 6, 7, 8	.05 μf	300 – 1900	7
C11, 12, 13, 14	.02 μf	300 – 1904	4
C10	25 μf 16 VDC	300 – 3008	1

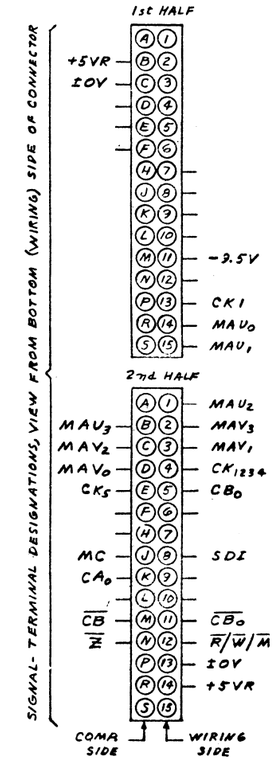

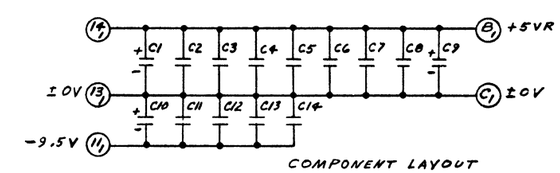

COMPONENT LAYOUT

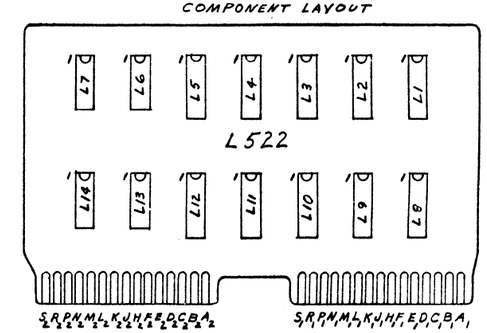

WANG LABORATORIES INC. TEWKSBURY, MASS.	
MODEL NO. 1200	DRAWN 9/17/71 APP. 3/10/72
	CHECKED APP.
TITLE SCHEMATIC, LOGIBLOC RAM (MOS MEMORY) # L522	
SHT OF	DWG. NO. D 6152-1 REV.

DO NOT SCALE

REVISION

DATE

ENG.

D 6152-1

THIS DOCUMENT IS THE PROPERTY OF WANG LABORATORIES, INC. AND SHALL NOT BE REPRODUCED OR COPIED, OR USED AS A BASIS FOR THE MANUFACTURE OR SALE OF APPARATUS OR DEVICES WITHOUT PERMISSION.

DO NOT SCALE

HOLE LEGEND		
DRILLED OR PUNCHED HOLE TOLERANCES:	HOLE DIA.	TOL.
	.0135 to .125	±.002
	.126 to .250	±.003
	.251 to .500	±.004
	.501 to .750	±.005

IDENT.	DESCRIPTION	QTY.
A		

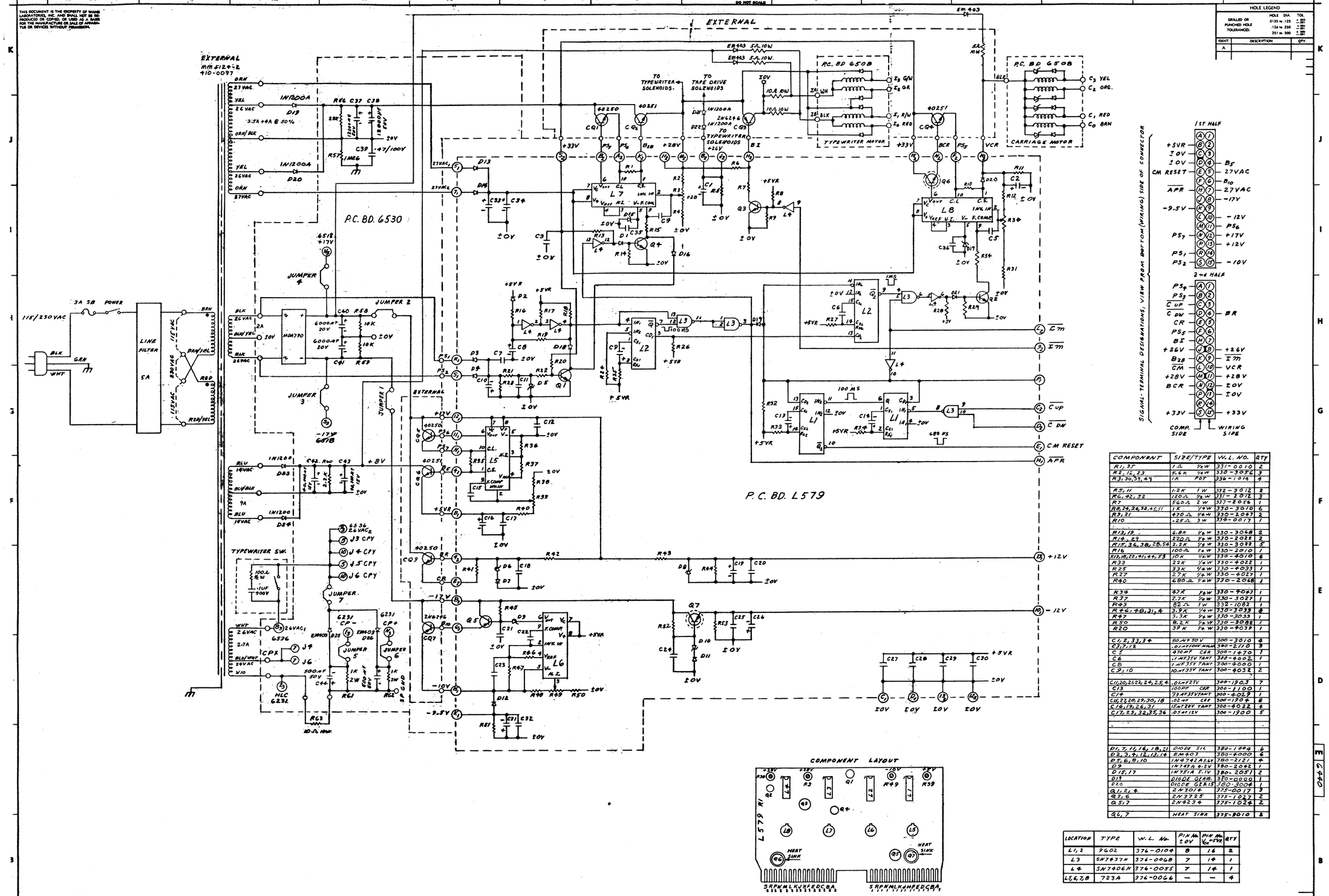

COMPONENT	SIZE/TYPE	W.L. NO.	QTY
R1, 37	1Ω ½W	337-0010	2
R2, 12, 23	5.6K ¼W	332-3056	3
R3, 30, 39, 43	1K POT	936-1014	4
R5, 11	1.2K 1W	332-3012	2
R6, 42, 52	120Ω ½W	331-2012	3
R7	560Ω 2W	337-2056	1
R8, 24, 26, 32, 45, 51	1K ½W	332-3010	6
R9, 21	470Ω ½W	332-2047	2
R10	.25Ω 3W	934-0017	1
R13, 19	6.8K ½W	330-3068	2
R14, 29	220Ω ½W	332-2022	2
R15, 36, 38, 28, 54	2.2K ½W	332-3022	5
R16	100Ω ½W	332-2010	1
R18, 18, 22, 41, 49, 53	10K ½W	332-4010	6
R33	22K ½W	332-4022	1
R25	3.3K ½W	332-4033	1
R27	2.7K ½W	332-4027	1
R40	680Ω ½W	332-2068	1
R34	47K ½W	332-4047	1
R37	2.7K ½W	332-3027	1
R43	82Ω 1W	332-1082	1
R44, 48, 31, 4	3.9K ½W	332-1033	4
R47	3.3K ½W	332-3033	1
R50	8.2K ½W	332-3082	1
R20	39K ½W	332-9039	1
C1, 2, 33, 34	50μF 50V	300-3010	4
C3, 7, 12	.01μF 100V MYLAR	380-2110	3
C5	470μF CER	300-1470	1
C6	.1μF 35V TANT	300-4002	1
C8	1μF 35V TANT	300-4010	1
C9, 10	10μF 35V TANT	300-4032	2
C11, 20, 21, 23, 24, 25, 4	.01μF 25V	300-1203	7
C13	100PF CER	300-1100	1
C14	33μF 35V TANT	300-4033	1
C15, 22, 28, 29, 30, 18	.02μF CER	300-1204	6
C16, 19, 26, 31	15μF 20V TANT	300-4032	4
C17, 23, 32, 35, 36	.03μF 15V	300-1200	5
D1, 7, 11, 16, 18, 21	DIODE SIL	380-1004	6
D2, 3, 9, 12, 13, 14	RM403	380-4000	6
D5, 6, 8, 10	1N4742A 5.6V	380-2121	4
D9	1N753A 6.2V	380-2062	1
D15, 17	1N751A 5.1V	380-2051	2
D19	DIODE GERM.	380-0000	1
D20	DIODE GER 15	380-3004	1
Q1, 2, 4	2N3016	375-0017	3
Q3, 6	2N2223	375-1027	2
Q5, 7	2N4234	375-1024	2
Q6, 7	HEAT SINK	375-9010	2

LOCATION	TYPE	W.L. No.	PIN No. ±0V	PIN No. ±5V	QTY
L1, 2	9602	376-0104	8	16	2
L3	SN7437N	376-0068	7	14	1
L4	SN7406N	376-0035	7	14	1
L5, 6, 7, 8	723A	376-0066	—	—	4

NO.	REVISION	DRAWN	M.F.	M.F.	DEC.	R.S.S.	R.S.A
		2-23-74	3-3-74	3-17-74	10-8-74	10-8-74	10-8-74
10	REVISED PER RFA 0698 APP'D						
20	REVISED PER RFA 0696 APP'D						
30	REVISED PER RFA 0756 APP'D						
40	REVISED PER ECN 9433						
50	REVISED PER ECN 9486						

WANG PART NO.	ITEM	QTY	NAME	MATERIAL	DESCRIPTION
Qty. Per	FIRST USED ON	ASSY USED ON			

WANG LABORATORIES, INC. TEWKSBURY, MASS. U.S.A.

	BY	DATE	APPROVED BY	DATE
DWN		2-22-74	E ENGR	4-8-74
CHK		6/21/74	M ENGR	
E.C. CONTROL			MFG ENGR	

MATERIAL

MODEL NO. 1222

SEE ENGRG SPECIFICATIONS No.

FINISH

TOL. EX. AS NOTED
XX ± .010 FRAC ± 1/64
XXX ± .005 ANG ± 1°30' FINISH 125

SCALE 2/1 SHT 4 OF 6

TITLE SCHEMATIC, LOGIBLOC L579 POWER SUPPLY REGULATOR

WANG PART NUMBER	SIZE	DRAWING NUMBER	REV.
	E	6440	6

E REV. 2

E 6440

COMP.	SIZE/TYPE		W.L. PART No.	QTY
R1	1.5K	1/4W	330-3015	1
R2,14	18K	1/4W	330-4018	2
R3	2.2K	1/2W	331-3022	1
R4	33K	1/4W	330-4033	1
R5,7,21	4.7K	1/4W	330-3047	3
R6,20,26	1K	POT	336-0003	3
R8	1K	1W	332-3010	1
R9,12,15,16	10K	1/4W	330-4010	4
R10	560Ω	1W	332-2056	1
R11	100Ω	2W	337-2010	1
R12	100Ω	1/4W	330-2010	1
R18	1Ω	1/2W	331-0010	1
R19	470Ω	1/4W	330-2047	1
R22	2.7K	1/4W	330-3027	1
R23	100Ω	1/2W	331-2010	1
R24	560Ω	1/4W	330-2056	1
R27	1K	1/4W	330-3010	1
R25,28,29	3.3K	1/4W	330-3033	3
R30	100Ω	1W	332-2010	1
R17	6.8	1/4W	330-3068	1
C10	.0068μf		300-1911	1
C2,3	1.2μf 50VDC		300-4030	2
C4,6,7	50μf 50VDC		300-3010	3
C5	.02μf 25V		300-1904	1
C8	18μf 16V TANT.		300-4018	1
C9	1μf 35V TANT		300-4000	1
C11,16,17	.05		300-1900	3
C12,13	100μf 25VDC		300-3033	2
C14,15	.01μf		300-1903	2
C18,19	100μf 50VDC		300-3052	1
D1,2,6,7,18	FM403		380-4000	5
D3,4,12,13	1N4742	12V	380-2121	4
D5,8,9,11	SIL. DIODE		380-1004	4
D10,14	1N749A	4.2V	380-2042	4
D16	SIL DIODE		380-1004	1
Q1,2	GT544		375-1017	2
Q3,4	2N3725		375-1027	2

LOCATION	TYPE	W.L. PART No.	TERM. NO. V_{CC} +5VR	TERM. No. ±0V	QTY
L1	SN74123N	376-0080	16	8	1
L2	SN7406	376-0055	14	7	1
L3,4	723	376-0066			

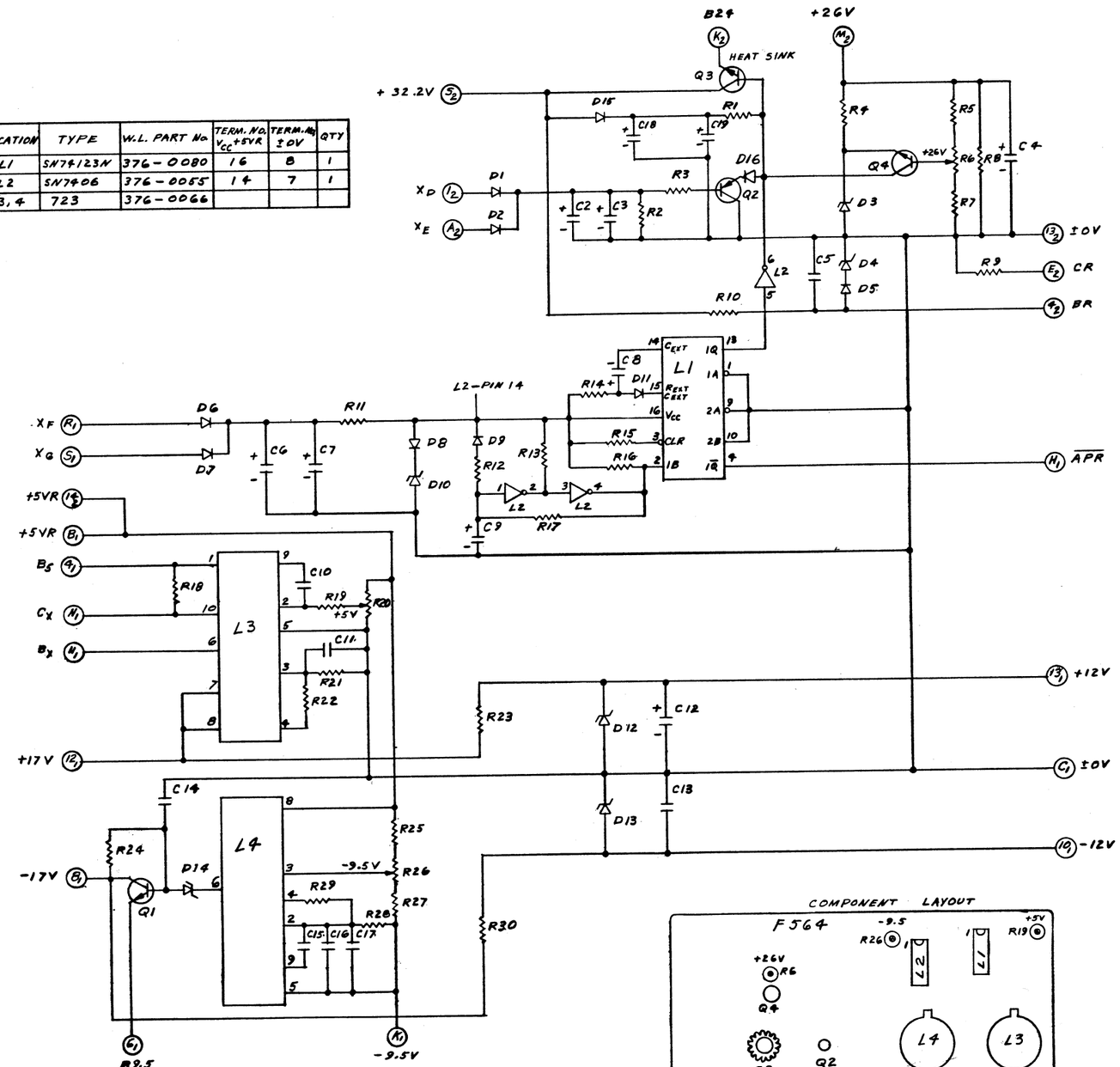

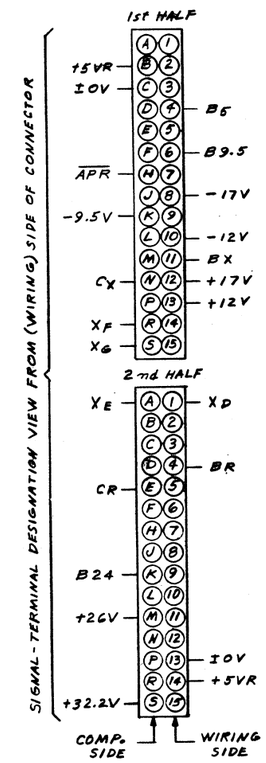

REVISION					
1	PER ECN 2932 DELETED R2 WAS 18K ADDED D15,C18 APP: SKH	3/21/72	4-5-72	5-15-72	3/31-72	4-30-73
2	PER ECN 2932 R23 WAS 150Ω APP: SKH					
3	PER ECN 2965 R2 WAS 47K ADDED D15 380-1004 APP: SKH					
4	PER ECN 3008 C2 & C3 WAS 1.2μf 35VDC APP: SKH					
5	REVISED PER E.C. # 3611 APPD. SKH					

WANG LABORATORIES INC.
TEWKSBURY, MASS.

MODEL NO. 1200 | DRAWN | CHECKED | APP. | 3/13/72

TITLE SCHEMATIC LOGIBLOC POWER SUPPLY F564

SHT 1 OF 1 | DWG. NO. D 6164-1 | REV. 5

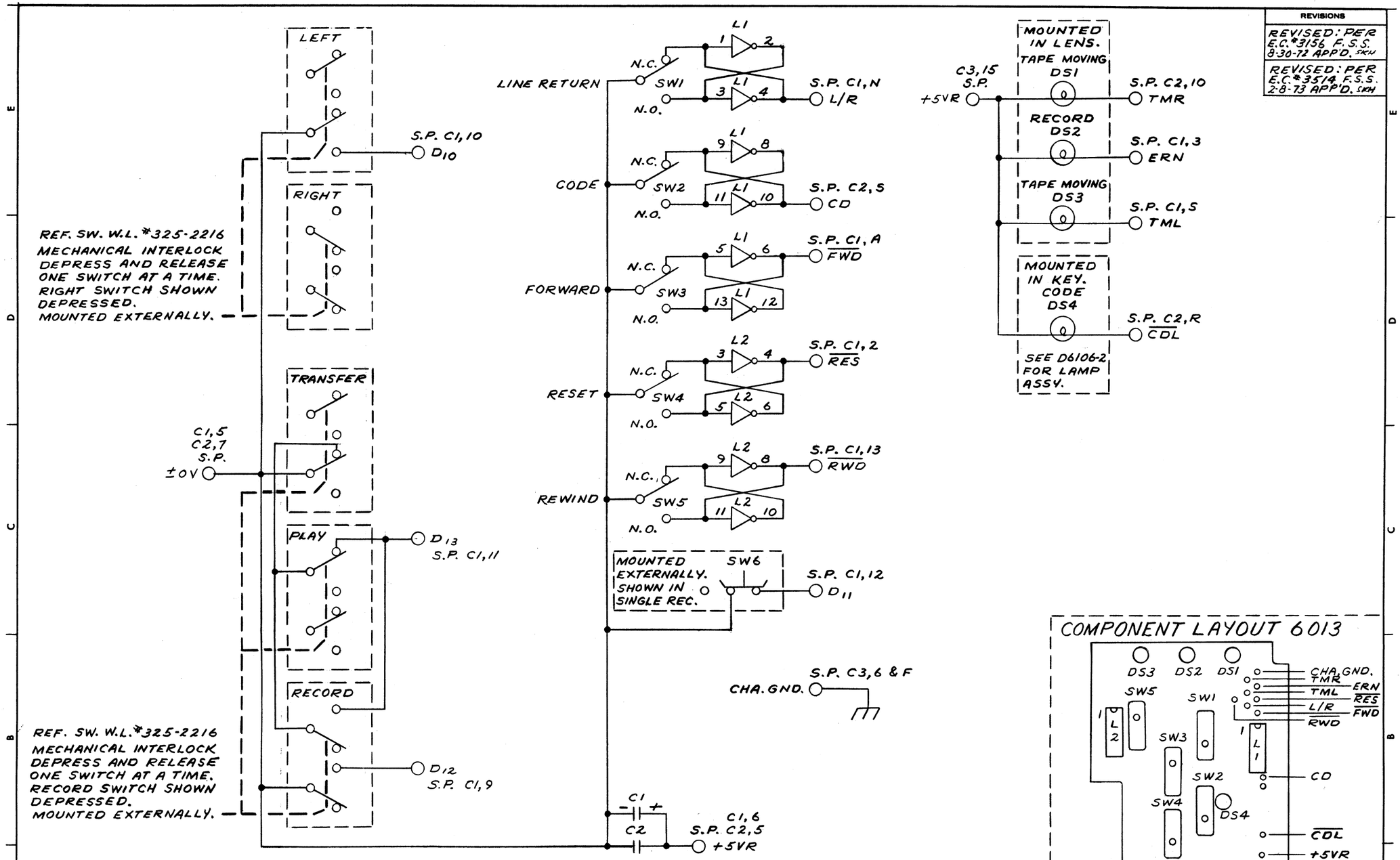

COMPONENT	SIZE, TYPE	W.L. NO.	QTY.
C1	10µf 15V	300-3006	1
C2	.05µf 12V	300-1900	1
DS1,2,3,4	CM-6833	370-0015	4
SW1,2,3,4,5	11SM1	325-2305	5
SW6	SLIDE SW.	325-2108	1

I.C. LOCATION	TYPE	W.L. NO.	TERM FOR ±0V	TERM FOR VCC +5VR	QTY.
L1,2	F9936	376-0026	7	14	2

COMPONENT LAYOUT 6013

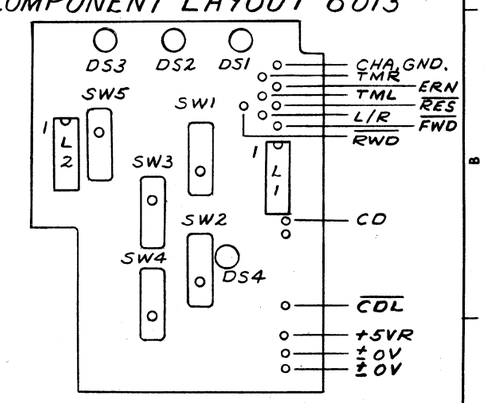

REVISIONS

REVISED: PER E.C. #3156 F.S.S. 8-30-72 APP'D. SKH

REVISED: PER E.C. #3514 F.S.S. 2-8-73 APP'D. SKH

WANG LABORATORIES INC.
TEWKSBURY, MASS.

MODEL NO.	DRAWN F.S.S.	2-10-72	APP.	3/17/72
1200	CHECKED		APP.	

TITLE SCHEMATIC LOGIBLOC LEFT KEYBOARD FOR MODEL 1200

W.O. NO. | DWG. NO. C 6013-1 | REV. 2

DWG. NO. C 6013-1

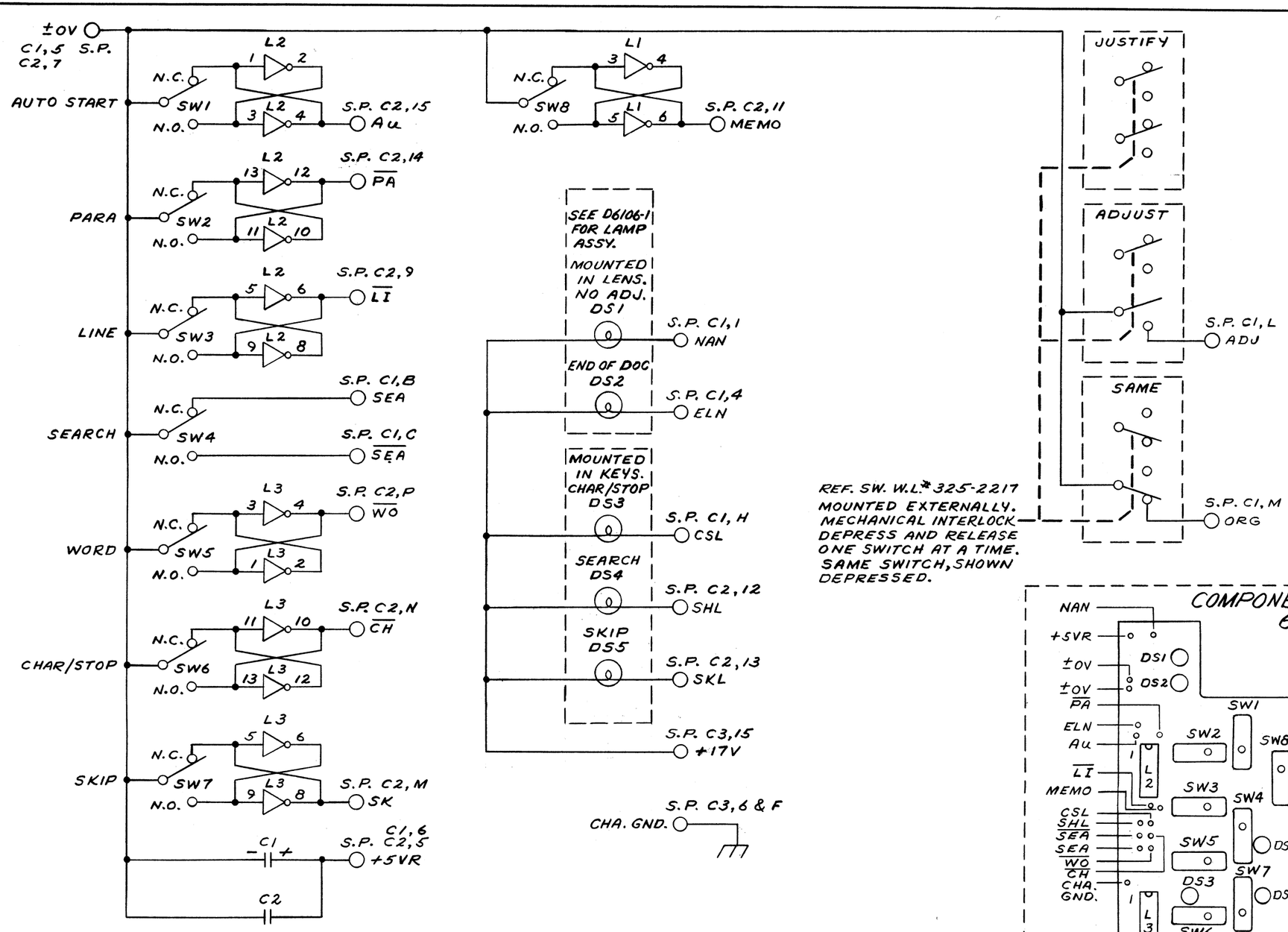

COMPONENT	SIZE, TYPE	W.L. NO.	QTY.
C1	10µf 15V	300-3006	1
C2	.05µf 12V	300-1900	1
DS1,2,3,4,5	CM-6833	370-0015	5
SW1,2,3,4,5,6,7,8	11SM1	325-2305	8

I.C. LOCATION	TYPE	W.L. NO.	TERM FOR ±0V	TERM FOR VCC +5VR	QTY.
L1,2,3	F9936	376-0026	7	14	2

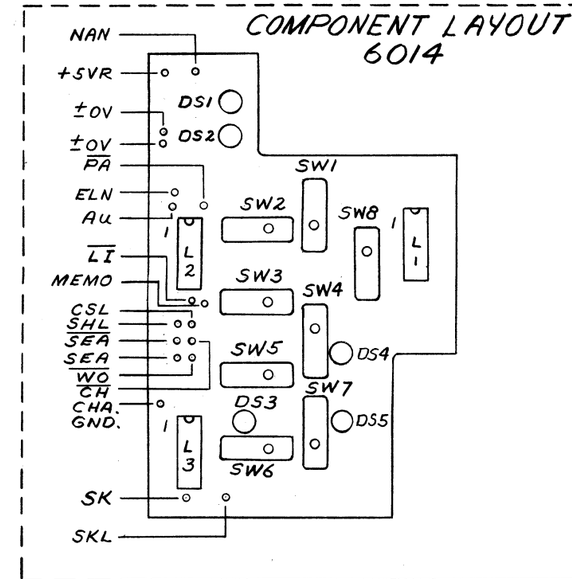

REVISIONS

REVISED: PER E.C.#3217. F.S.S. 9-16-72 APP'D SKH

REVISED: PER E.C.#3514 F.S.S. 2-8-73 APP'D. SKH

WANG LABORATORIES INC.
TEWKSBURY, MASS.

MODEL NO.	DRAWN	CHECKED	APP.	APP.
1200	F.S.S. 2-8-72		DTD 3/17/72	

TITLE
SCHEMATIC LOGIBLOC
RIGHT KEYBOARD FOR MODEL 1200

W.O. NO. | DWG. NO. C 6014-1 | REV. 2

DWG. C6014-1

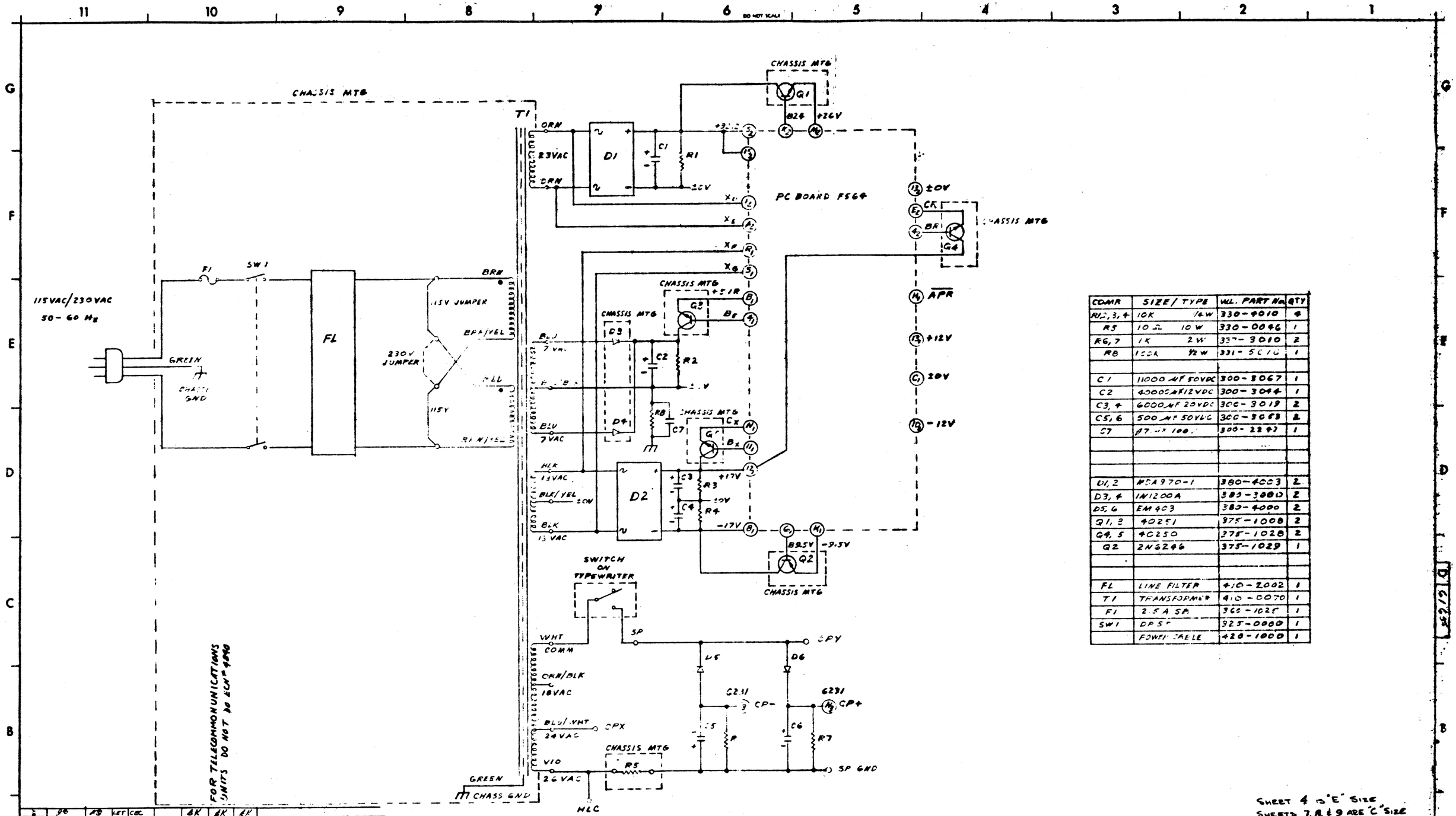

COMP	SIZE / TYPE		WL. PART No.	QTY
R1,2,3,4	10K	1/4W	330-4010	4
R5	10 Ω	10 W	330-0046	1
R6,7	1K	2 W	337-3010	2
R8	100K	1/2 W	331-5010	1
C1	11000 µF	50VDC	300-3067	1
C2	4000 µF	12VDC	300-3044	1
C3,4	6000 µF	20VDC	300-3019	2
C5,6	500 µF	50VDC	300-3063	2
C7	.47 µF	100V	300-2247	1
D1,2	MDA970-1		380-4003	2
D3,4	1N1200A		383-3001	2
D5,6	EM403		383-4000	2
Q1,3	40251		375-1008	2
Q4,5	40250		375-1028	2
Q2	2N6246		375-1029	1
FL	LINE FILTER		410-2002	1
T1	TRANSFORMER		410-0070	1
F1	2.5 A SB		365-1025	1
SW1	DPST		325-0000	1
	POWER CABLE		420-1000	1

FOR TELECOMMUNICATIONS UNITS DO NOT DO ECN# 4690

REV	BY	DATE	REVISION
0			
1	PB	1-31-73	PER ECN# 3687 REMOVED CHGED FROM LINE FILTER APP'D SPK
2	PB	7-26-73	PER ECN# 3660 C1 WAS 4000 µF APP'D SPK
3	LET	11-7-74	SEE SHEETS 2,3 & 4
4	CEL	1-22-74	REV. PER ECN 0902 1/11/74 MEM (EE)
5			REV. PER ECN 1276 SEE SHEETS 3 & 4 ONLY LET 11-13-74
6	AK	4-7-75	REV PER ECN-4742 SEE SHEET 2. APP'D:
7	AK	6-10-75	REV PER ECN-4840 SEE SHEET 4. APP'D:
8	AK	6-30-75	REV PER ECN 4680 APP'D: TSF 6/24/75

SHEET 4 IS "E" SIZE
SHEETS 7, 8, & 9 ARE "C" SIZE

WANG LABORATORIES INC.
TEWKSBURY, MASS.

MODEL NO 1200 | DRAWN | CHK'D | APP'D | DATE 8/1/72

TITLE SCHEMATIC LOG. BLOC 6165 POWER SUPPLY AND MOTHER BOARD

SHT 6 OF 9 | SIZE D | DWG NO 6165 | REV 8

6177 CONN.1
6178 CONN.1
6176 CONN.1
L522 CONN.1
6195 CONN.1
6192 CONN.1
6174 CONN.1
6173 CONN.1
6172 CONN.1
6171 CONN.1
6170 CONN.1
C1
6237 CONN.1
6231 CONN.1
F564 CONN.1
JUMPERS
6165- X6
C3
C4
C2
C1
P1 TO ROM DWG. 5969-1 OR R.O.M. DWG. 6293-1 OR DUAL ROM CONTROL DWG. 6264-1
P2 TO R.O.M. DWG. 5969-1 OR R.O.M. DWG. 6293-1 OR DUAL ROM CONTROL DWG 6264-1
NOTE: P1 & P2 REF. HARNESS DWG. D5776-981
SHEET 6 IS "D" SIZE
SHEETS 7,8,& 9 ARE "C" SIZE
C-6165-2 RIGHT DECK
C-6165-4 LEFT DECK
CABLE 1
CABLE 2
CABLE 3
CABLE 4
WANG LABORATORIES, INC.
MODEL NO. 1200
SCHEMATIC LOGIBLOC 6165
POWER SUPPLY AND MOTHER BOARD
210-6165
E
6165
8

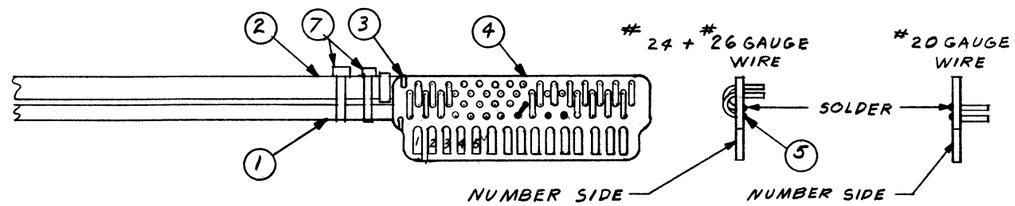

TO SIGNAL SOLDER PT	WIRE LENGTH A	WIRE LENGTH B	WIRE NO. OR COLOR	FROM 5223 PIN NO.	REMARKS
$\overline{ROP}$	1 3/8"	4 5/8"	1	1	
RTCK	1 1/2"	4 1/2"	2	2	
RDK	1 5/8"	6 1/4"	3	3	
				4	
				5	
				6	
				7	
				8	#24 BUSS TO J
+12V	2 1/2"	1 3/4"	4	9	
CH GND	3	1 3/4"	GREEN	10	
-12VR	3	1 1/2"	5	11	
+26VR	3 1/2"	6"	YELLOW	12	
FSR	3 5/8"	8 1/2"	BROWN	13	
RSR	3 3/4"	7 1/4"	ORANGE	14	
HIR	3 7/8"	7"	BLUE	15	
$\overline{RCR_0}$	1 1/4"	4 3/8"	6	A	
DIR_1	1 3/8"	4 1/4"	7	B	
DIR_0	1 1/2"	6"	8	C	
				D	
				E	
				F	
				H	
±0V	2 1/4"	2 1/2"	SHIELD	J	#20 BLACK
+5VR	2 3/4"	2"	9 AND 10	K	
24VAC	—	—	—	L	#24 BUSS TO M
24VAC	3 1/4"	5 1/4"	BLACK	M	
24VAC	3 3/8"	5 1/4"	WHITE	N	
$M_1 X_R$	3 1/2"	4 1/4"	GRAY	P	
$M_2 X_R$	3 5/8"	4 1/2	VIOLET	R	
CAPST	3 3/4"	4"	RED	S	

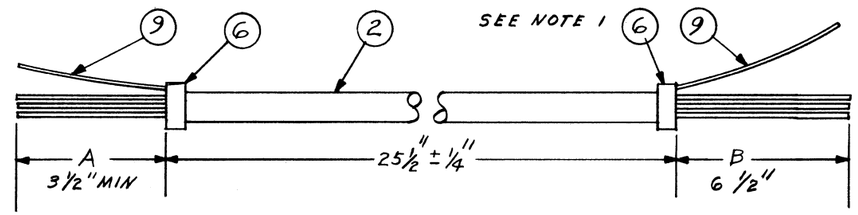

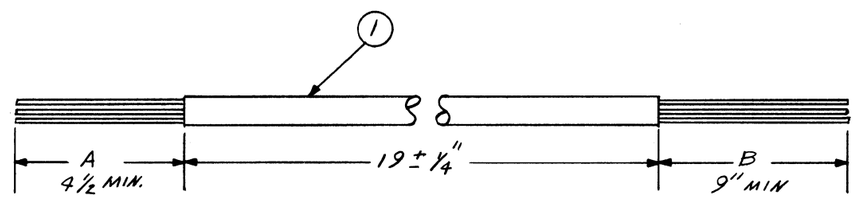

NOTE:
1. TO INSTALL ITEM 6 USE T&B TOOL NO. WT640 WITH DIE No. 6403. ADJUST TOOL TO A GAP OF .200

ITEM	QTY	NAME	W. L. PART NO.	DESCRIPTION
1	33"	CABLE	420-0038	10 COND #22 GAUGE
2	36	CABLE	420-0032	10 COND #28 GAUGE SHIELDED
3	A/R	LACING	605-1001	BLACK
4	1	P.C. BOARD	510-5223	FINGER BOARD
5	A/R	SOLDER	660-0202	63/37
6	2	SH. TERM.	654-0058	T&B #RSK 300 YELLOW
7	2	PAN-TY	605-1004	PLTIM-M
8	A/R	BUSS	600-9007	#24 GAUGE
9	A/R	WIRE	600-0500	#20 GAUGE BLACK

REVISIONS

REVISED: PER E.C. #3088 F.S.S. 7-7-72 APP'D SKH

REVISED: PER ECN #3182 8-28-72 APP'D SKH

REVISED: PER ECN #3433 12-15-72 APP'D CW

WANG LABORATORIES INC.
TEWKSBURY, MASS.

MODEL NO.	DRAWN	CHECKED	APP.	APP.
1200	6/13/72		6-14-72	

TITLE
CABLE RIGHT TAPE DECK
W.L. 220-0081

W.O. NO. SHT 3 OF 5 | DWG. NO. C 6165-1 | REV. 3

DWG. NO. C

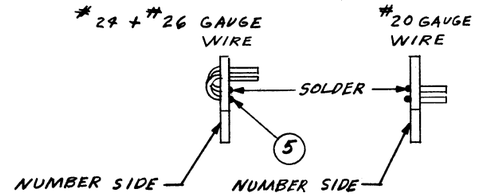

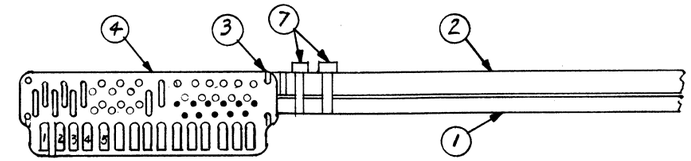

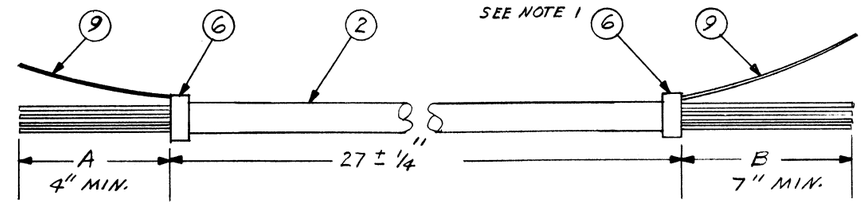

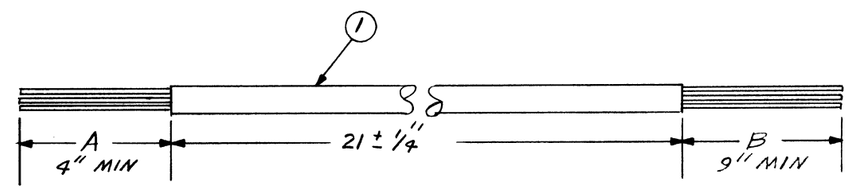

TO SIGNAL SOLDER PT	WIRE LENGTH A	WIRE LENGTH B	WIRE NO. OR COLOR	FROM 5223 PIN NO.	REMARKS
LOP	3 3/8"	6 3/8"	1	1	
LTCK	3 1/8"	5 1/4"	2	2	
LDK	3"	5 1/2"	3	3	
				4	
				5	
				6	
				7	
				8	#24 BUSS TO J
+12V	2 1/8"	1 3/4"	4	9	
CH GND	1 3/4"	1 3/4"	GREEN	10	
-12VR	1 7/8"	1 1/2"	5	11	
+26VR	1 3/4"	6 1/2"	YELLOW	12	
FSL	1 5/8"	8 1/2"	BROWN	13	
RSL	1 1/2"	8 3/4"	ORANGE	14	
HIL	1 3/8"	6 1/4"	BLUE	15	
RCLo	3 1/2"	6 1/2	6	A	
DILi	3 1/4"	5 3/8"	7	B	
DILo	3 1/8"	5 3/4"	8	C	
				D	
				E	
				F	
				H	
±OV	2 1/4"	2 3/4"	SHIELD	J	#20 BLACK
+5VR	2 3/4"	2"	9 AND 10	K	
24VAC				L	#24 BUSS TO M
24VAC	2"	5 1/4"	BLACK	M	
24VAC	1 7/8"	5 1/4"	WHITE	N	
M_1 X_L	1 3/4"	4 3/4"	GRAY	P	
M_2 X_L	1 5/8"	5"	VIOLET	R	
CAPST	1 1/2"	4"	RED	S	

NOTE:
1. TO INSTALL ITEM 6 USE T&B TOOL NO. WT 640 WITH DIE NO. 6403 ADJUST TOOL TO A GAP OF .200

ITEM	QTY	NAME	W.L. PART NO.	DESCRIPTION
1	35"	CABLE	420-0038	10 COND. #22 GAUGE
2	39"	CABLE	420-0032	10 COND. #28 GAUGE SHIELDED
3	A/R	LACING	605-1001	BLACK
4	1	P.C. BD.	510-5223	FINGER BOARD
5	A/R	SOLDER	660-0202	63/37
6	2	SH. TERM.	654-0058	T&B #RSK300 YELLOW
7	2	PAN-TY	605-1004	PLTIM-M
8	A/R	BUSS	600-9007	#24 GAUGE
9	A/R	WIRE	600-0500	#20 GAUGE BLACK

REVISIONS
REVISED: PER E.C. R5084 F.S.S 7-7-72 APP. RH
REVISED PER ECN R3432 12-15-72 APP. GW

WANG LABORATORIES INC.
TEWKSBURY, MASS.

MODEL NO.	DRAWN		APP.	
1200	CHECKED		APP.	

TITLE
CABLE LEFT TAPE DECK
W.L. 220-0080

W.O. NO. SHT 4 OF 5 | DWG. NO. C 6165-1 | REV. 3

DWG. NO. C

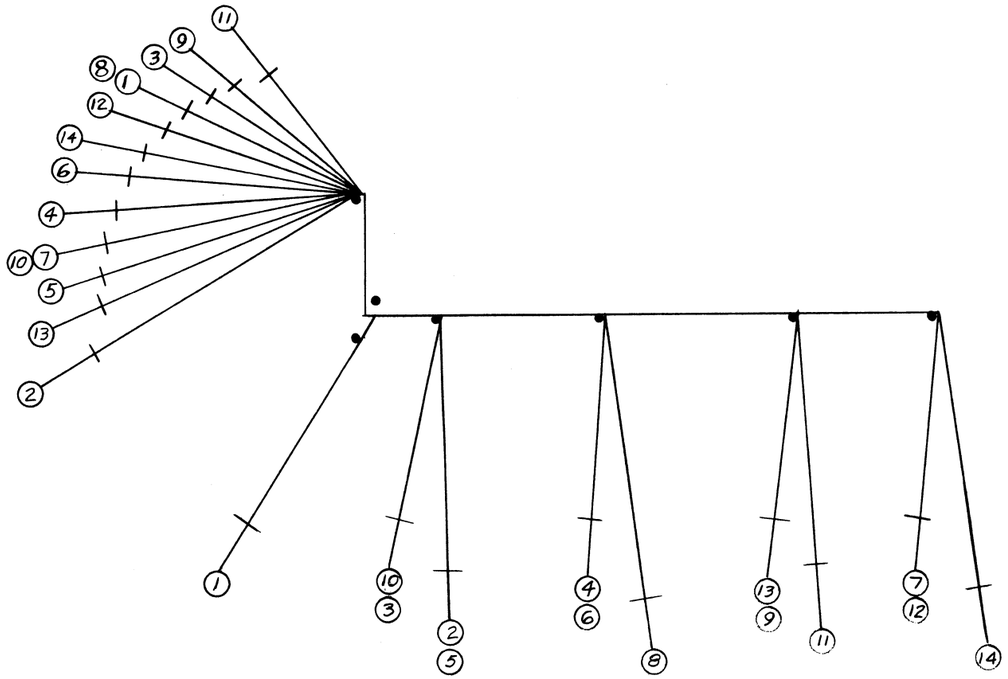

WIRE RUN LIST

WIRE	SIZE	COLOR
1	24	WHITE/BROWN
2	24	ORANGE
3	24	YELLOW
4	24	WHITE/RED
5	24	VIOLET
6	24	GRAY
7	24	WHITE/ORANGE
8	18	WHITE
9	18	RED
10	24	WHITE/YELLOW
11	24	BLUE
12	24	BROWN
13	24	WHITE/GREEN
14	24	GREEN

REV	BY	DATE	REVISIONS
1	[illegible]	6-18-72	PER ECN # 3677 RED AND WHITE WIRES WERE #20 ga APP: L. SKH

IDENT	QTY	NAME	W.L. PART NO.	DESCRIPTION
	A/R	PAN-TY	605-1004	PLTIM-M
	A/R	WIRE	600-0009	#18 WHITE
	A/R	WIRE	600-0002	#18 RED
	A/R	WIRE	600-2095	#24 WHITE/GREEN
	A/R	WIRE	600-2094	#24 WHITE/YELLOW
	A/R	WIRE	600-2093	#24 WHITE/ORANGE
	A/R	WIRE	600-2092	#24 WHITE/RED
	A/R	WIRE	600-2091	#24 WHITE/BROWN
	A/R	WIRE	600-2008	#24 GRAY
	A/R	WIRE	600-2007	#24 VIOLET
	A/R	WIRE	600-2006	#24 BLUE
	A/R	WIRE	600-2005	#24 GREEN
	A/R	WIRE	600-2004	#24 YELLOW
	A/R	WIRE	600-2003	#24 ORANGE
	A/R	WIRE	600-2001	#24 BROWN

WANG LABORATORIES INC.
TEWKSBURY, MASS.

MODEL NO.	DRAWN		APP.	
1200	CHECKED		APP.	

TITLE: PANEL TRANSISTOR CABLE

W.O. NO. SHT 5 OF 5 | DWG. NO. C 6165-1 | REV.

DWG. NO. C

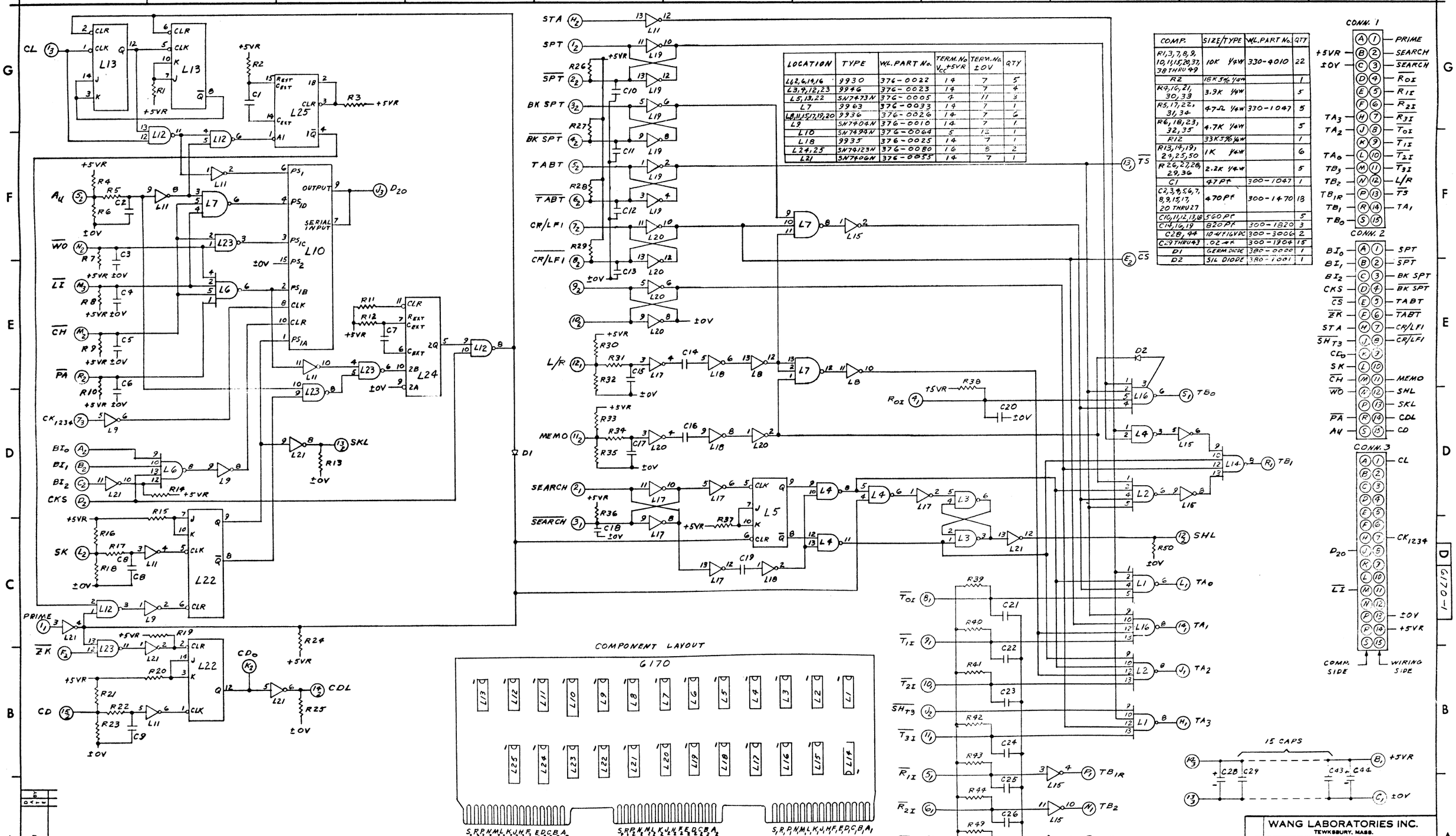

LOCATION	TYPE	W/L. PART No.	TERM. No V_{CC} +5VR	TERM. No ±0V	QTY
L1,2,6,14,16	9930	376-0022	14	7	5
L3,4,12,23	9946	376-0023	14	7	4
L5,13,22	SN7473N	376-0005	4	11	3
L7	9963	376-0033	14	7	1
L8,11,15,17,19,20	9936	376-0026	14	7	6
L9	SN7404N	376-0010	14	7	1
L10	SN7494N	376-0064	5	12	1
L18	9935	376-0025	14	7	1
L24,25	SN74123N	376-0080	16	8	2
L21	SN7406N	376-0055	14	7	1

COMP.	SIZE/TYPE	W/L. PART No.	QTY
R1,3,7,8,9, 10,11,15,20,37, 38 THRU 49	10K 1/4W	330-4010	22
R2	18K 5% 1/4W		1
R4,16,21, 30,33	3.9K 1/4W		5
R5,17,22, 31,34	47Ω 1/4W	330-1047	5
R6,18,23, 32,35	4.7K 1/4W		5
R12	33K 5% 1/4W		1
R13,14,19, 24,25,50	1K 1/4W		6
R 26,27,28, 29,36	2.2K 1/4W		5
C1	47PF	300-1047	1
C2,3,4,5,6,7, 8,9,15,17, 20 THRU 27	470PF	300-1470	18
C10,11,12,13,16	560PF		5
C14,16,19	820PF	300-1820	3
C28,44	10-47 16VDC	300-3006	2
C29 THRU 43	.02 4K	300-1904	15
D1	GERM. DIODE	380-0000	1
D2	SIL DIODE	380-1001	1

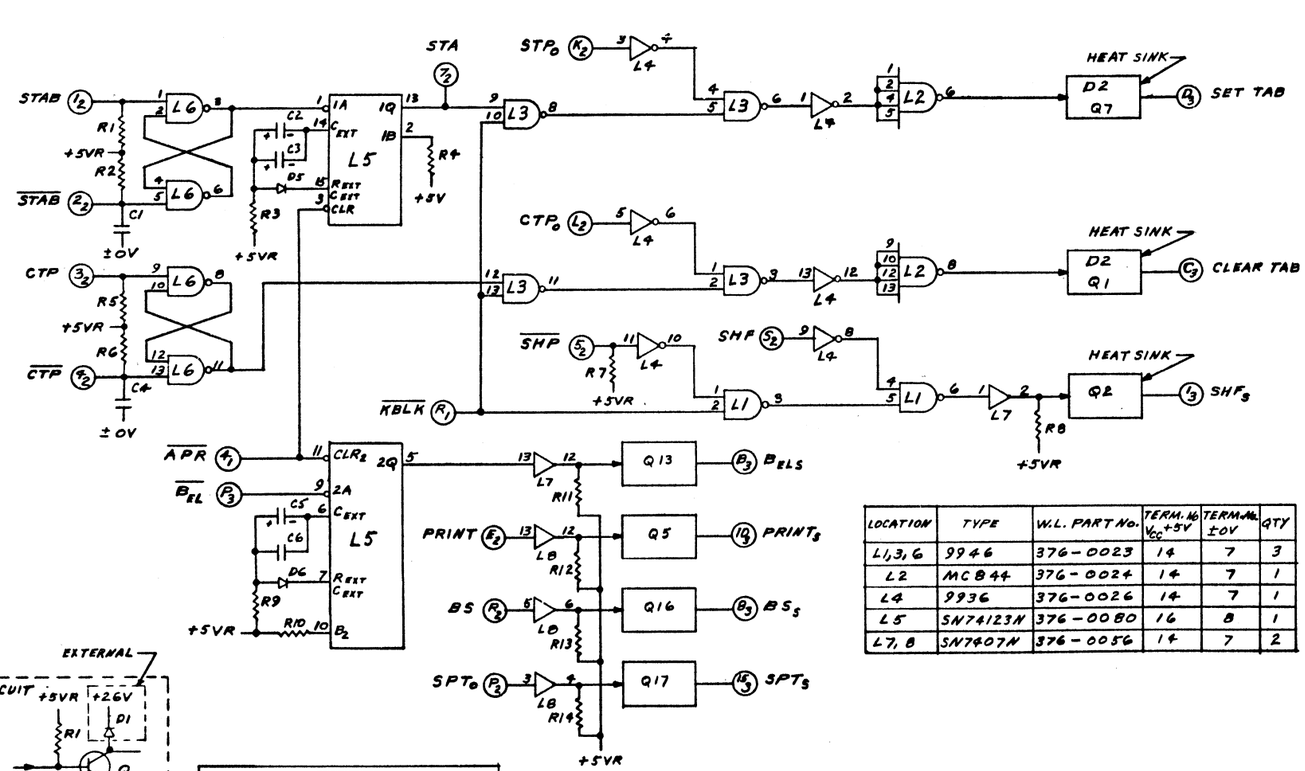

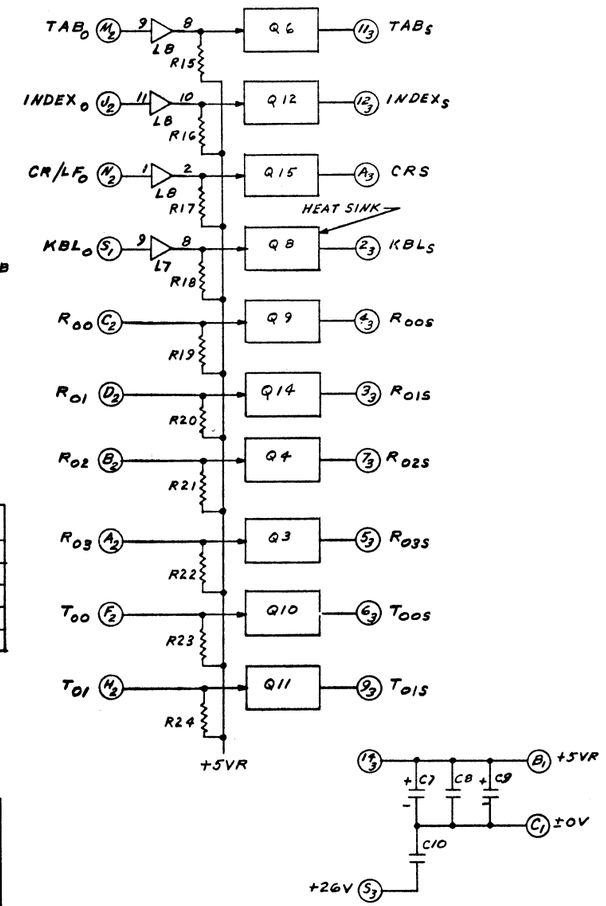

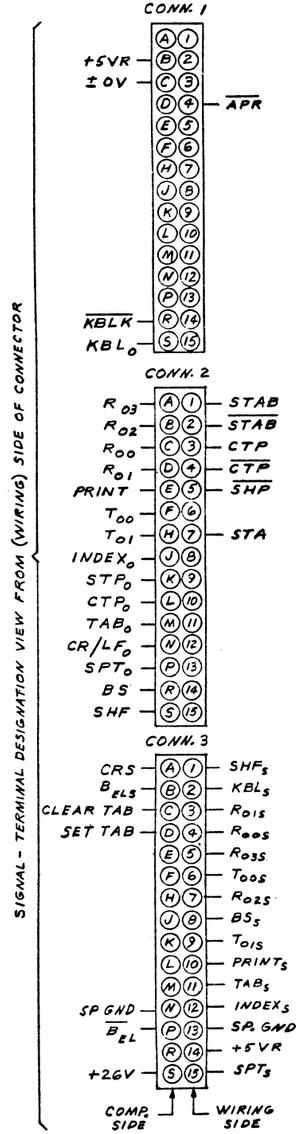

LOCATION	TYPE	W.L. PART No.	TERM. No. V_{CC} +5V	TERM. No. ±0V	QTY
L1,3,6	9946	376-0023	14	7	3
L2	MC844	376-0024	14	7	1
L4	9936	376-0026	14	7	1
L5	SN74123N	376-0080	16	8	1
L7, 8	SN7407N	376-0056	14	7	2

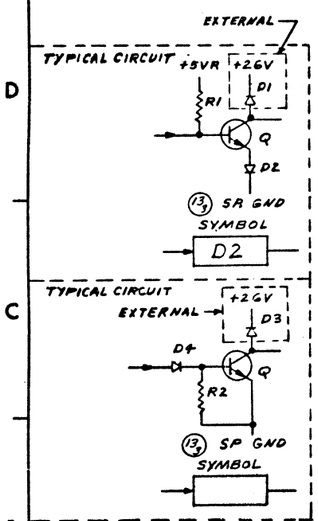

D2			
COMP.	SIZE/TYPE	W.L. PART No.	QTY
R1	120Ω 1/4W	330-2012	2
D1	SIL DIODE	380-1004	
D2	EM403	380-4000	2
Q	2N3725	375-1027	2

COMP.	SIZE/TYPE	W.L. PART No.	QTY
R2	2.2K 1/4W	330-2022	15
D3	SIL. DIODE	380-1004	
D4	SIL. DIODE	380-1001	15
Q	2N3725	375-1027	15

COMPONENT LAYOUT

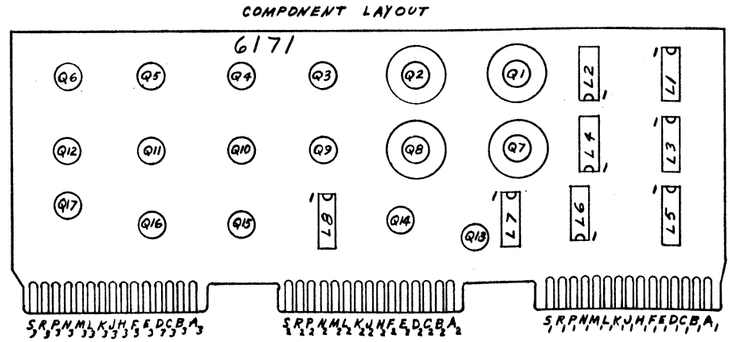

COMPONENT	SIZE/TYPE	W.L. PART No.	QTY
R1,2,4,5,6,7,10	10K 1/4W	330-4010	7
R3	18K 5% 1/4W	330-4019	1
R8,18, THRU 24	470Ω 1/4W	330-2047	8
R11,13,14,15,16,17	390Ω 1/4W	330-2039	6
R12	560Ω 1/4W	330-2056	1
R9	27K 5% 1/4W	330-4028	1
C1, 4	220 PF	300-1220	2
C7, 9	10μF 16VDC	300-3006	3
C5	5.6μF 35V TANT	300-4025	1
C2, 6	2.2μF 5% 20V TANT	300-4023	2
C8	.02 μF	300-1904	1
C10	.006 μF/100V	300-2068	1
C3	33μF 5% 10V TANT	300-4019	1
D5, 6	SIL. DIODE	380-1001	2

REVISION		BY	DATE
1	PER ECN 2933 D1 AND D2 NOW MOUNTED ON CHASSIS APP. SCH	JB	5-9-72

WANG LABORATORIES INC.
TEWKSBURY, MASS.

MODEL NO. 1200 | DRAWN JB 1/10/72 | CHECKED | APP. DJ 3/10/72 | APP.

TITLE SCHEMATIC LOGIBLOC # 6171 TYPEWRITER OUTPUT DRIVER

SHT OF | DWG. NO. D 6171-1 | REV. 1

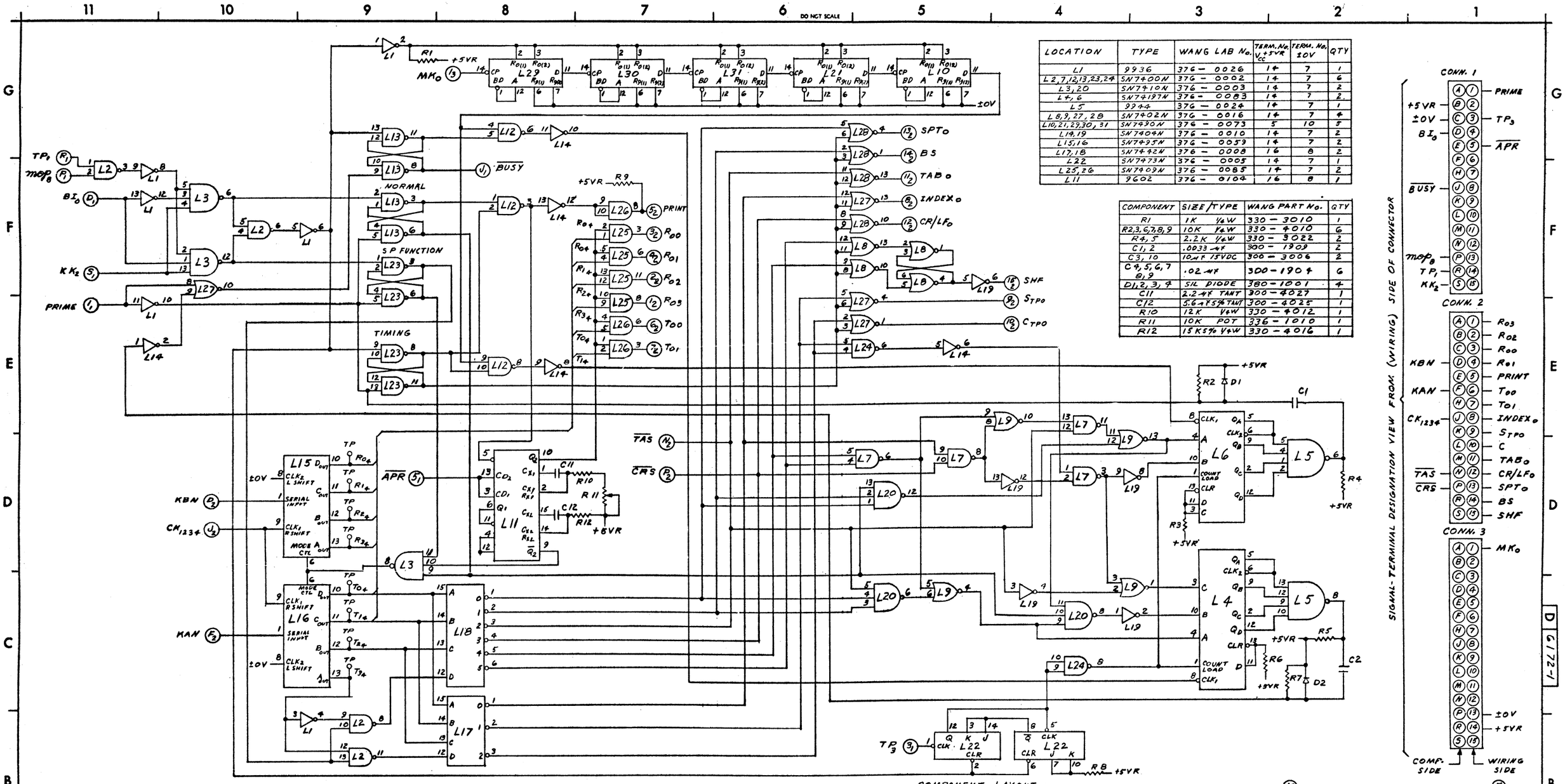

LOCATION	TYPE	WANG LAB No.	TERM. No. V_{CC} +5VR	TERM. No. ±0V	QTY
L1	9936	376 – 0026	14	7	1
L2,7,12,13,23,24	SN7400N	376 – 0002	14	7	6
L3,20	SN7410N	376 – 0003	14	7	2
L4,6	SN74197N	376 – 0083	14	7	2
L5	9944	376 – 0024	14	7	1
L8,9,27,28	SN7402N	376 – 0016	14	7	4
L10,21,29,30,31	SN7430N	376 – 0073	5	10	5
L14,19	SN7404N	376 – 0010	14	7	2
L15,16	SN7495N	376 – 0059	14	7	2
L17,18	SN7442N	376 – 0008	16	8	2
L22	SN7473N	376 – 0005	14	7	1
L25,26	SN7409N	376 – 0085	14	7	2
L11	9602	376 – 0104	16	8	1

COMPONENT	SIZE/TYPE	WANG PART No.	QTY
R1	1K 1/4W	330 – 3010	1
R2,3,6,7,8,9	10K 1/4W	330 – 4010	6
R4,5	2.2K 1/4W	330 – 3022	2
C1,2	.0033 μF	300 – 1909	2
C3,10	10μF 15VDC	300 – 3006	2
C4,5,6,7 8,9	.02 μF	300 – 1904	6
D1,2,3,4	SIL DIODE	380 – 1001	4
C11	2.2 μF TANT	300 – 4027	1
C12	5.6 μF 5% TANT	300 – 4025	1
R10	12K 1/4W	330 – 4012	1
R11	10K POT	336 – 1010	1
R12	15K 5% 1/4W	330 – 4016	1

NO	REVISION	BY	DATE
1	PER ECN # 2837 ADDED CHIP 9602 AND CIRCUIT APP. – S.C. HO		4-6-72
2	PER ECN # 2930 DELETED D3, D4. R12 WAS 10K C11 WAS 3.3μF APP. SCH		5-9-72
3	REVISED PER ECN W3429 APP'D SCH		12-13-72
4	INVERTER PINS 12/13 OF L14 WAS LANDED APP'D SCH		4-18-73
5	RFA #0073 L3 PINS CORRECTED ADDED RFA TO ③ APP'D SCH		4-30-73
6	REVISED PER ECN # 3719 APP'D SCH		7-27-78

WANG LABORATORIES INC.
TEWKSBURY, MASS.

MODEL NO.	DRAWN		APP.	
1200	10/7/71			3/17/72
	CHECKED		APP.	

TITLE SCHEMATIC LOGIBLOC # 6172
TYPEWRITER OUTPUT CONTROL

SHT OF | DWG. NO. D 6172-1 | REV. 5

DO NOT SCALE

LOCATION	TYPE	W.L. PART No.	TERM. No. V_{CC} +5VR	TERM. No. ±0V	QTY
L1, 17, 27	709C	376-0000			3
L2,4,13,14,15,22,23,24,26	MC 9946	376-0023	14	7	9
L3, 12	MC 9930	376-0022	14	7	2
L5,10,20,21,29	MC 9936	376-0026	14	7	5
L6	SN7430N	376-0031	14	7	1
L7, 11, 25	SN74123N	376-0080	16	8	3
L8, 28	SN7400N	376-0002	14	7	2
L9, L19	SN7410N	376-0003	14	7	2
L16	SP380A	376-0081	8	1	1
L18	SN7404N	376-0010	14	7	1

COMPONENT	SIZE/TYPE	W.L. PART No.	QTY
R1	10K POT	336-1004	1
R 8,10,12,13,14,18, 23,24,25,28	10K ¼W	330-4010	10
R3	330K ¼W	330-5033	1
R4,21	680Ω ¼W	330-2068	2
R5,20,26	4.7K ¼W	330-3047	3
R6,27	1MEG ¼W	330-6010	2
R2	12K ¼W	330-4012	1
R9	27K 5% ¼W	330-4028	1
R11	18K ¼W	330-4018	1
R15	15K 5% ¼W	330-4016	1
R17	1K ¼W	330-3010	1
R19	18K 5% ¼W	330-4019	1
R22	180K ¼W	330-5018	1
R29	15K ¼W	330-4015	1
R16	12K 5% ¼W	330-4013	1
C1	1.2 μf 5%	300-4013	1
C2, 12	33 μf 5% TANT	300-4019	2
C3,14	.1 μf	300-1918	2
C4,15,17	.001 μf	300-1906	3
C5, 16,18	220 pf	300-1220	3
C6, 13	2.2 μf 5% TANT	300-4014	2
C7,10	470 pf	300-1470	2
C8	47 pf	300-1047	1
C9	.47 μf TANT	300-4001	1
C11	5.6 μf 5% TANT	300-4017	1
C19,30,34,36	10 μf 16VDC	300-3006	4
C20,21,22,23,24, 25,26,27,28,29, 31,32,33,35	.02 μf	300-1904	14
D1,2,3,4,5,6,7	SIL DIODE	380-1001	7
R7	8.2K ¼W	330-3082	1

SIGNAL-TERMINAL DESIGNATIONS, VIEW FROM BOTTOM (WIRING) SIDE OF CONNECTOR

CONN. 1: −12V, +5VR, ±0V, (D) +12V, $\overline{MD}$, TA_2, $\overline{TS}$, $\overline{CS}$, TA_1, TA_0, TB_2, TB_3, TB_{1R}, TB_0, CD_0 — KB_0, MD, TA_3, TB_1

CONN. 2: KA_1, KA_0, $\overline{TAS}$, $\overline{CRS}$, $\overline{SHT_3}$, PRINT, (K) KA_3, $\overline{ZK}$, KA_2, KB_2, SBD, $\overline{BUSY}$, KB_3 — SH

CONN. 3: SCRB, KB_1, $\overline{CRI}$, $\overline{RC}$, DIN_1, DIN_0, KBP, MOP_{11}, BI_0, MOP_{13}, MOP_{14}, CK_5 — KR/B, $\overline{KBLK}$, $\overline{PT}$, PT, KAP, +12V, −12V, R/B, ±0V, +5VR

COMP. SIDE — WIRING SIDE

COMPONENT LAYOUT 6173

REV	BY	DATE
1	PER ECN #2987 R1 WAS 5K POT CONNECT PIN 11 TO 3 OF L11. APP. SKM	5/20/72
2	PER ECN #3175 R1 WAS 12K APPD. SKM	8-23-72

WANG LABORATORIES INC. TEWKSBURY, MASS.

MODEL NO. 1200 — DRAWN 7/15/72 — CHECKED — APP. 3/17/72

TITLE SCHEMATIC LOGIBLOC #6173 KA KB CODE CONVERTER

SHT OF — DWG. NO. D 6173-1 — REV 2

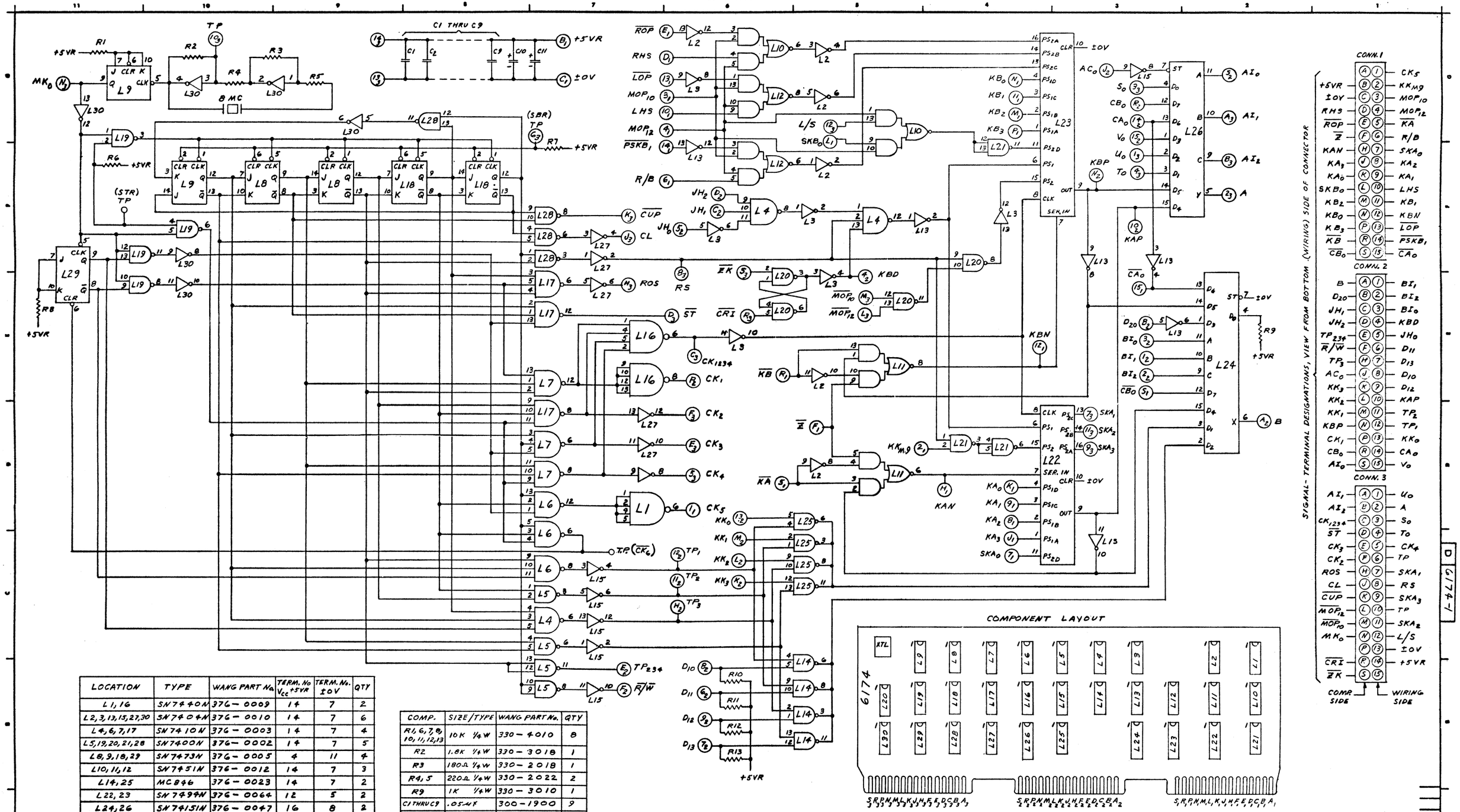

LOCATION	TYPE	WANG PART No.	TERM. No V_{CC} +5VR	TERM. No. ±0V	QTY
L1, 16	SN7440N	376-0009	14	7	2
L2, 3, 13, 15, 27, 30	SN7404N	376-0010	14	7	6
L4, 6, 7, 17	SN7410N	376-0003	14	7	4
L5, 19, 20, 21, 28	SN7400N	376-0002	14	7	5
L8, 9, 18, 29	SN7473N	376-0005	4	11	4
L10, 11, 12	SN7451N	376-0012	14	7	3
L14, 25	MC846	376-0023	14	7	2
L22, 23	SN7494N	376-0064	12	5	2
L24, 26	SN74151N	376-0047	16	8	2

COMP.	SIZE/TYPE	WANG PART No.	QTY
R1, 6, 7, 8, 10, 11, 12, 13	10K 1/4W	330-4010	8
R2	1.8K 1/4W	330-3018	1
R3	180Ω 1/4W	330-2018	1
R4, 5	220Ω 1/4W	330-2022	2
R9	1K 1/4W	330-3010	1
C1 THRU C9	.05μF	300-1900	9
C10, 11	10μF 16VDC	300-3006	2
XTAL	8MC	321-0008	1

IDENT	QTY	NAME	MATERIAL	DESCRIPTION

TOL. EX. AS NOTED .XX ±.010 .XXX ±.005 ANG. ±0°30' FRAC. ±1/64

FINISH

MATERIAL

FINISH

WANG LABORATORIES, INC.
TEWKSBURY, MASS. U. S. A.

DR DATE 9/2/71
CHK DATE
APPD DATE 3/17/72

MODEL No. 1200 W.O. No. SCALE SHEET OF

TITLE SCHEMATIC LOGIBLOC, TIMING KA KB REGISTERS #6174

PART NUMBER	REV	SIZE	DRAWING NUMBER
		D	6174-1

X2

NO.	REVISION	BY

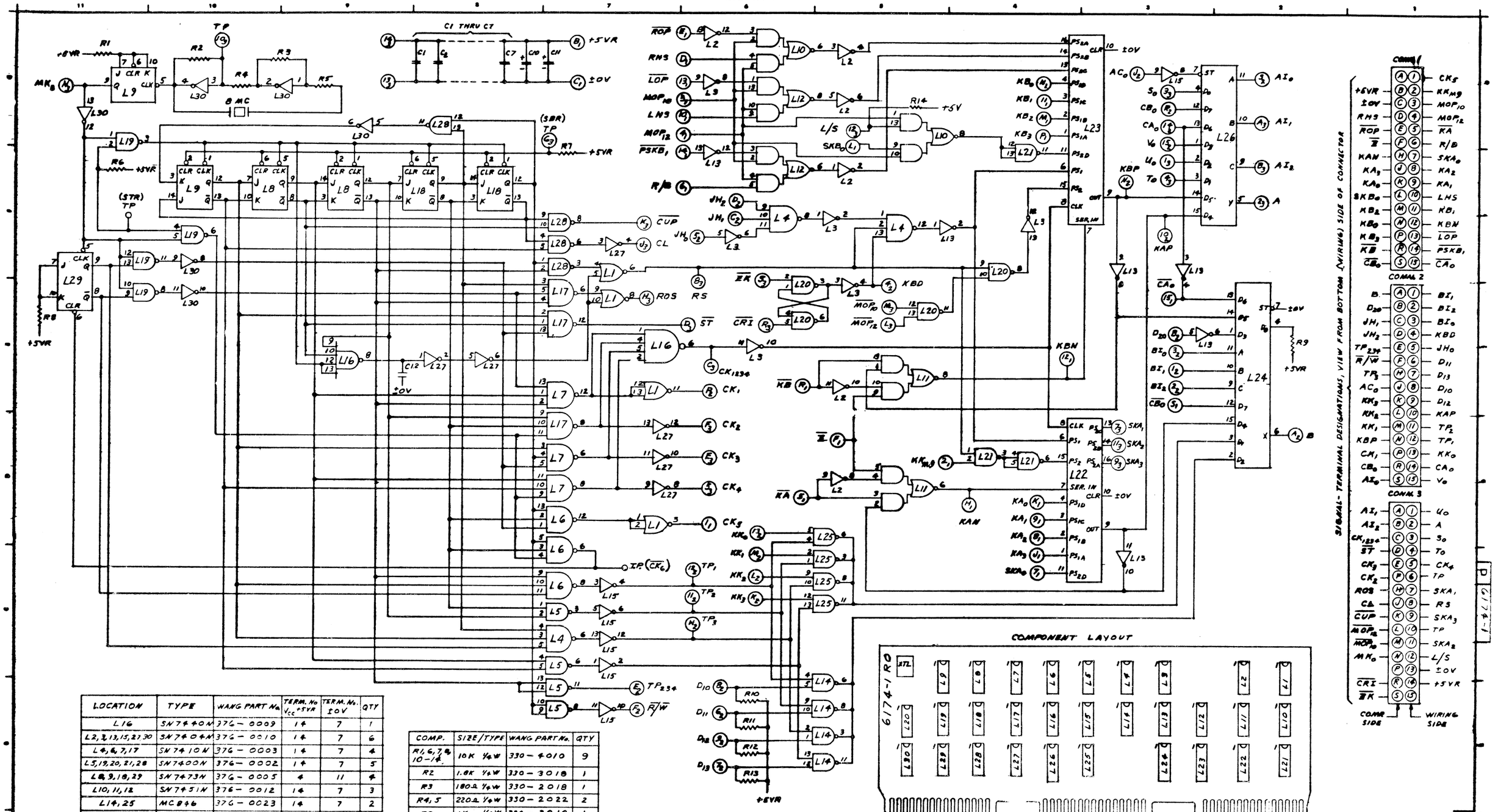

LOCATION	TYPE	WANG PART No.	TERM. No V_{CC} +5VR	TERM. No. ±0V	QTY
L16	SN7440N	376-0009	14	7	1
L2, 3, 13, 15, 27, 30	SN7404N	376-0010	14	7	6
L4, 6, 7, 17	SN7410N	376-0003	14	7	4
L5, 19, 20, 21, 28	SN7400N	376-0002	14	7	5
L8, 9, 18, 29	SN7473N	376-0005	4	11	4
L10, 11, 12	SN7451N	376-0012	14	7	3
L14, 25	MC846	376-0023	14	7	2
L22, 23	SN7499N	376-0064	12	5	2
L24, 26	SN74151N	376-0047	16	8	2
L1	SN7437N	376-0068	14	7	1

COMP.	SIZE/TYPE	WANG PART No.	QTY
R1, 6, 7 & 10-14	10K ¼W	330-4010	9
R2	1.8K ¼W	330-3018	1
R3	180Ω ¼W	330-2018	1
R4, 5	220Ω ¼W	330-2022	2
R9	1K ¼W	330-3010	1
C1 THRU C7	.05μF	300-1900	7
C10, 11	15μF 20VDC	300-4022	2
XTAL	8MC	321-0009	1
C12	160PFCER	300-1150	1

REV	DATE	BY	REVISION
1	1-13-75	G.D.	REVISED PER RFA 1325 & 1326 AND PRA
2	1-16-75	G.D.	RFA 1435

E. REV. 0

ITEM	QTY	NAME	MATERIAL	DESCRIPTION
			DR	DATE
			CHK	DATE
			APPD	DATE

WANG LABORATORIES, INC.
TEWKSBURY, MASS. U.S.A.

MODEL No. 1220 | W.O. No. | SCALE | SHEET OF

TITLE: SCHEMATIC LOGIBLOC, TIMING KA KB REGISTERS #6174-1

210-6174-1 | 1 | D | 6174-1 | 2
PART NUMBER | REV | SIZE | DRAWING NUMBER

Sheet 4 of 6

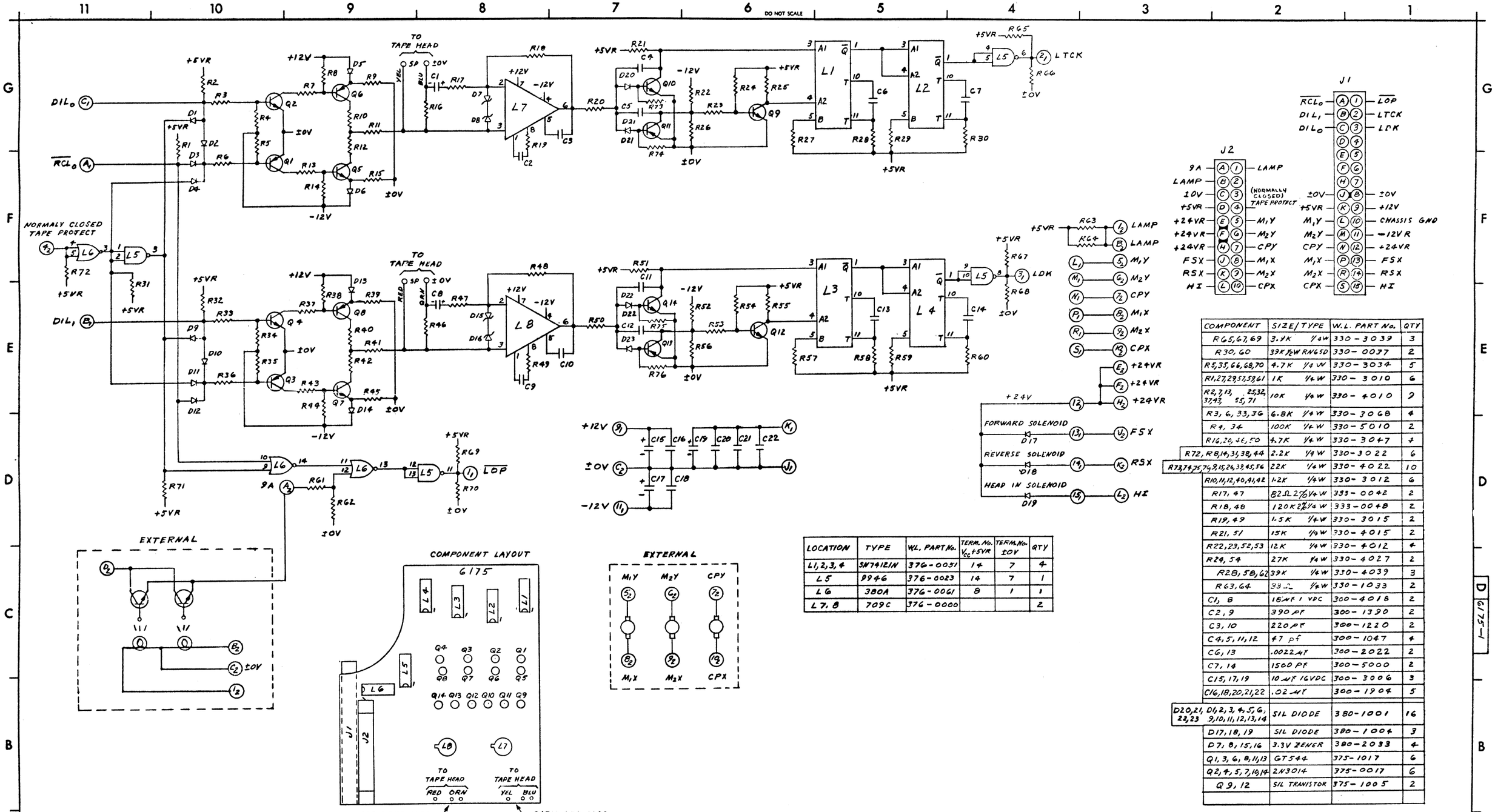

COMPONENT	SIZE/TYPE	W.L. PART No.	QTY
R65, 67, 69	3.9K 1/4W	330-3039	3
R30, 60	39K 1/2W RN65D	330-0037	2
R5, 35, 66, 68, 70	4.7K 1/4W	330-3034	5
R1, 27, 29, 51, 59, 61	1K 1/4W	330-3010	6
R2, 7, 13, 25, 32, 37, 43, 55, 71	10K 1/4W	330-4010	9
R3, 6, 33, 36	6.8K 1/4W	330-3068	4
R4, 34	100K 1/4W	330-5010	2
R16, 20, 46, 50	4.7K 1/4W	330-3047	4
R72, R8, 14, 31, 38, 44	2.2K 1/4W	330-3022	6
R73, 74, 75, 9, 15, 26, 33, 45, 56	22K 1/4W	330-4022	10
R10, 11, 12, 40, 41, 42	1.2K 1/4W	330-3012	6
R17, 47	82Ω 2% 1/4W	333-0042	2
R18, 48	120K 2% 1/4W	333-0048	2
R19, 49	1.5K 1/4W	330-3015	2
R21, 51	15K 1/4W	330-4015	2
R22, 23, 52, 53	12K 1/4W	330-4012	4
R24, 54	27K 1/4W	330-4027	2
R28, 58, 62	39K 1/4W	330-4039	3
R63, 64	33Ω 1/4W	330-1033	2
C1, 8	15μF 1 VDC	300-4018	2
C2, 9	390 pF	300-1390	2
C3, 10	220 pF	300-1220	2
C4, 5, 11, 12	47 pf	300-1047	4
C6, 13	.0022 μF	300-2022	2
C7, 14	1500 PF	300-5000	2
C15, 17, 19	10 μF 16VDC	300-3006	3
C16, 18, 20, 21, 22	.02 μF	300-1904	5
D20, 21, 22, 23, D1, 2, 3, 4, 5, 6, 9, 10, 11, 12, 13, 14	SIL DIODE	380-1001	16
D17, 18, 19	SIL DIODE	380-1004	3
D7, 8, 15, 16	3.3V ZENER	380-2033	4
Q1, 3, 6, 8, 11, 13	GT544	375-1017	6
Q2, 4, 5, 7, 10, 14	2N3014	375-0017	6
Q9, 12	SIL TRANISTOR	375-1005	2

LOCATION	TYPE	W.L. PART No.	TERM. No. V_{CC} +5VR	TERM. No. ±0V	QTY
L1, 2, 3, 4	SN74121N	376-0031	14	7	4
L5	8946	376-0023	14	7	1
L6	380A	376-0061	8	1	1
L7, 8	709C	376-0000			2

NO.	REVISION	DATE	BY
1	PER ECN 3070 TAPE PROTECT WAS ON (2) ADDED CIRCUIT L6-PIN 1,5 AND 2.2K RESISTOR. APP'D SKH	6-30-72	SB
2	REVISED: PER ECN 3088 APP'D SKH	7-25-72	FES
3	REVISED: PER ECN #3088 APP'D SKH	7-25-72	FES
4	REVISED: PER ECN #3092 APP'D SKH	7-27-72	SB
5	REVISED: PER E.C.N. #3098 APP'D SKH	7/27/72	SB
6	PER ECN 3131 Q10, 14 WAS SIL TRANSISTOR APP'D SKH	8-18-72	SB
7	PER ECN #3182 DELETED KEY BETWEEN PINS 1 & 2 ON J1 APP'D SKH	8-28-72	SB
8	PER ECN #3183 ADDED R73, 74 & 75 APP'D SKH	8-30-72	SB
9	PER ECN #3249 C1, C8 WAS 2.54 μF APP'D SKH	9-27-72	SB
10	PER ECN #3268 R20, 50 WAS 10K APP'D SKH	9-30-72	SB

WANG LABORATORIES INC.
TEWKSBURY, MASS.

MODEL NO.	DRAWN	APP.
1200	SB 12/9/71	3/17/72
	CHECKED	APP.

TITLE: SCHEMATIC, LOGIBLOC LEFT & RIGHT TAPE DECK # 6175

SHT OF | DWG. NO. D 6175-1 | REV. 10

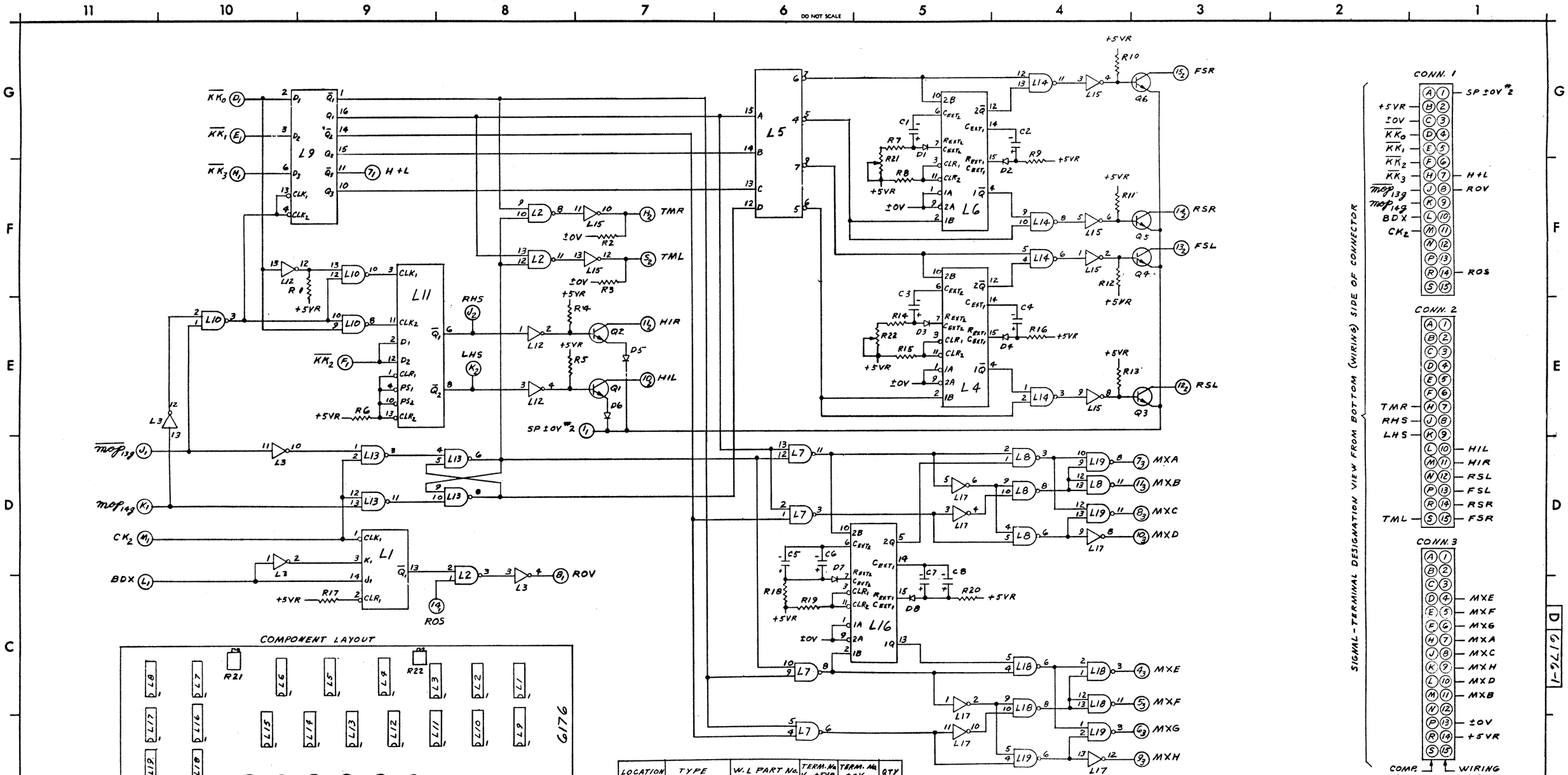

LOCATION	TYPE	W.L PART No.	TERM. No. V_{CC} +5VR	TERM. No. ±0V	QTY
L1	SN7473N	376-0005	4	11	1
L2,7,8,10,13,14,18,19	SN7400N	376-0002	14	7	8
L3,17	SN7404N	376-0010	14	7	2
L4,6,16	SN74123N	376-0080	16	8	3
L5	SN7442N	376-0008	16	8	1
L9	SN7475N	376-0013	5	12	1
L11	SN7474N	376-0006	14	7	1
L12	SN7406N	376-0055	14	7	1
L15	SN7407N	376-0056	14	7	1

COMP.	SIZE/TYPE	W.L. PART No.	QTY
R21, 22	10K POT	336-1010	2

COMP.	SIZE/TYPE	W.L. PART No.	QTY
R1,2,3,6,8,15,17,19	1K 1/4W	330-3010	1
R4,5	390Ω 1/4W	330-2039	2
R7,14	6.8K 1/4W	330-3068	2
R9,16,18,20	10K 1/4W	330-4010	4
R10,11,12,13	470Ω 1/4W	330-2047	4
C1,2,3,4	5.6μf 5% TANT	300-4017	4
C5,7	33μf 5% TANT	300-4019	2
C6,8	2.2μf 5% TANT	300-4014	2
C9,18	10μf 16VDC	300-3006	2
C10,11,12,13,14,15,16,17	.02μf	300-1904	8
D1,2,3,4,7,8	SIL DIODE	380-1001	6
D5,6	EM403	380-4000	2
Q1,2,3,4,5,6	2N3725	375-1027	6

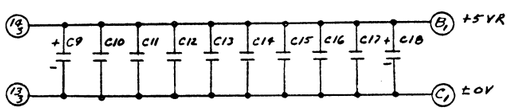

NO	REVISION	BY	DATE
1	PER ECN #2B64 R7 AND R14 WAS 10K. ADDED 10K POT IN SERIES WITH R2. ADDED 10K POT IN SERIES WITH R14 APP: S.K.HO		4-11-72

WANG LABORATORIES INC.
TEWKSBURY, MASS.

MODEL NO.	DRAWN	CHECKED	APP.	APP.
1200	2/16/71			3/13/72

TITLE: SCHEMATIC LOGIBLOC #6176
TAPE OUTPUT AND MODE M CONTROL

SHT OF — DWG. NO. D 6176-1 — REV 1

X2

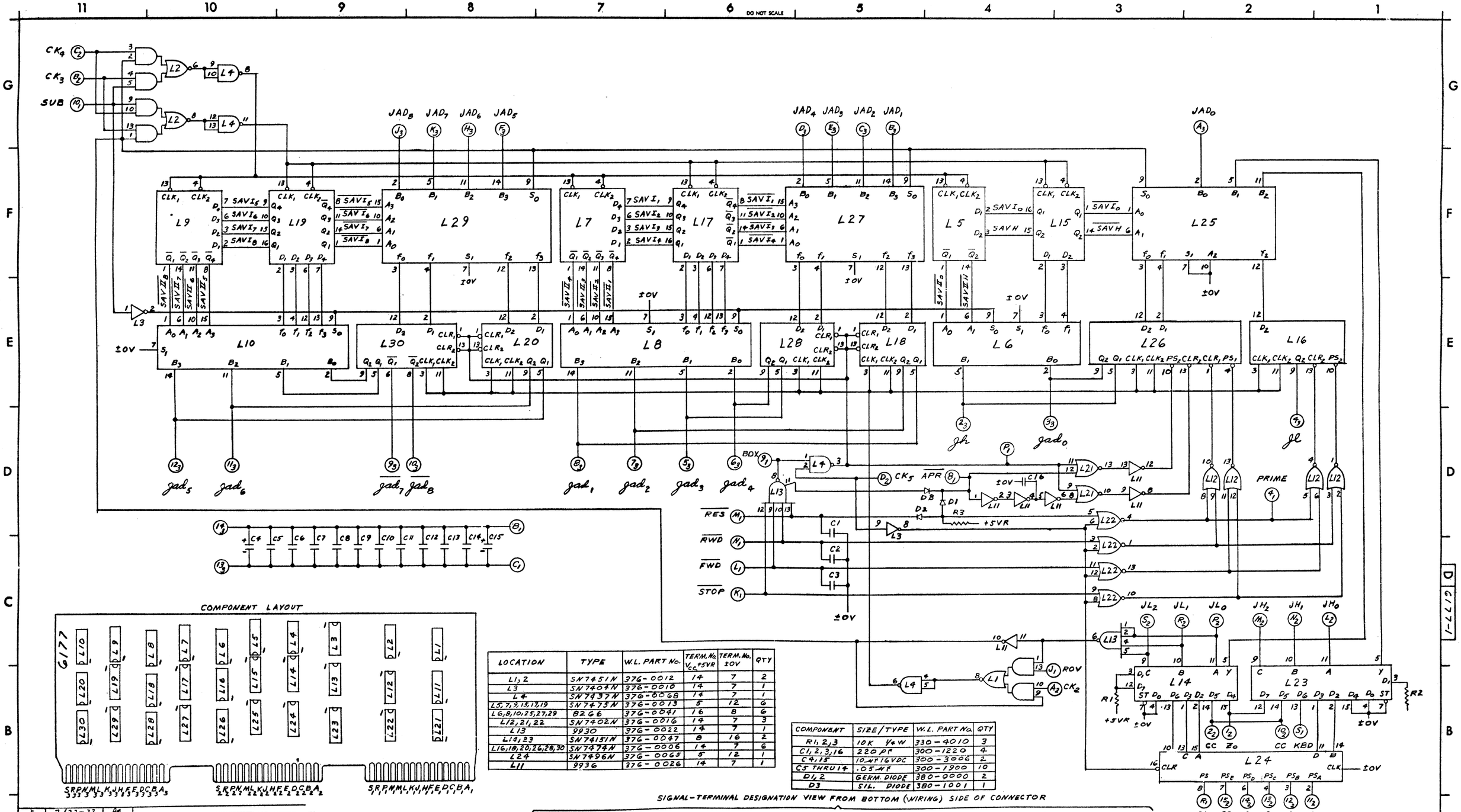

LOCATION	TYPE	W.L. PART No.	TERM. No. V_{CC} +5VR	TERM. No. ±0V	QTY
L1, 2	SN7451N	376-0012	14	7	2
L3	SN7404N	376-0010	14	7	1
L4	SN7437N	376-0068	14	7	1
L5, 7, 9, 15, 17, 19	SN7475N	376-0013	5	12	6
L6, 8, 10, 25, 27, 29	8266	376-0041	16	8	6
L12, 21, 22	SN7402N	376-0016	14	7	3
L13	9930	376-0022	14	7	1
L14, 23	SN74151N	376-0047	8	16	2
L16, 18, 20, 26, 28, 30	SN7474N	376-0006	14	7	6
L24	SN7496N	376-0065	5	12	1
L11	9936	376-0026	14	7	1

COMPONENT	SIZE/TYPE	W.L. PART No.	QTY
R1, 2, 3	10K ½W	330-4010	3
C1, 2, 3, 16	220 pf	300-1220	4
C4, 15	10 mf 16VDC	300-3006	2
C5 THRU 14	.05 mf	300-1900	10
D1, 2	GERM. DIODE	380-0000	2
D3	SIL. DIODE	380-1001	1

SIGNAL-TERMINAL DESIGNATION VIEW FROM BOTTOM (WIRING) SIDE OF CONNECTOR

CONN. 1: PRIME, APR, BDX, SUB; +5VR, ±0V, ROV, STOP, FWD, RES, RWD, CL, KBD
CONN. 2: Zo, CC, CC, So, S1, S2, S3, SC; CK2, CK3, CK4, CK5, JH0, JH2, JH1, JL0, JL1, JL2
CONN. 3: jh, jado, jl, jad3, jad4, jad2, jad1, jad7, jad8, jad6, jad5, ±0V, +5VR; JAD0, JAD1, JAD2, JAD4, JAD3, JAD5, JAD6, JAD8, JAD7

WIRING SIDE
COMP. SIDE

REV	DATE	REVISION	BY
1	3/27-72	PER ECN 28 #5 L13 WAS W.376-0022 L11 WAS W.376-0010 ADDED OUT SIDE ANX. GERM. DIODE APP: SKH	JB
2	6-14-73	REVISED PER ECN #3659 APP: D SKH	

WANG LABORATORIES INC.
TEWKSBURY, MASS.

MODEL NO. 1200 | DRAWN JB 1/7/72 | CHECKED | APP. | APP. 3/7/72

TITLE SCHEMATIC, LOGIBLOC # 6177
R.O.M. ADDRESS

SHT OF | DWG. NO. D 6177-1 | REV. 2

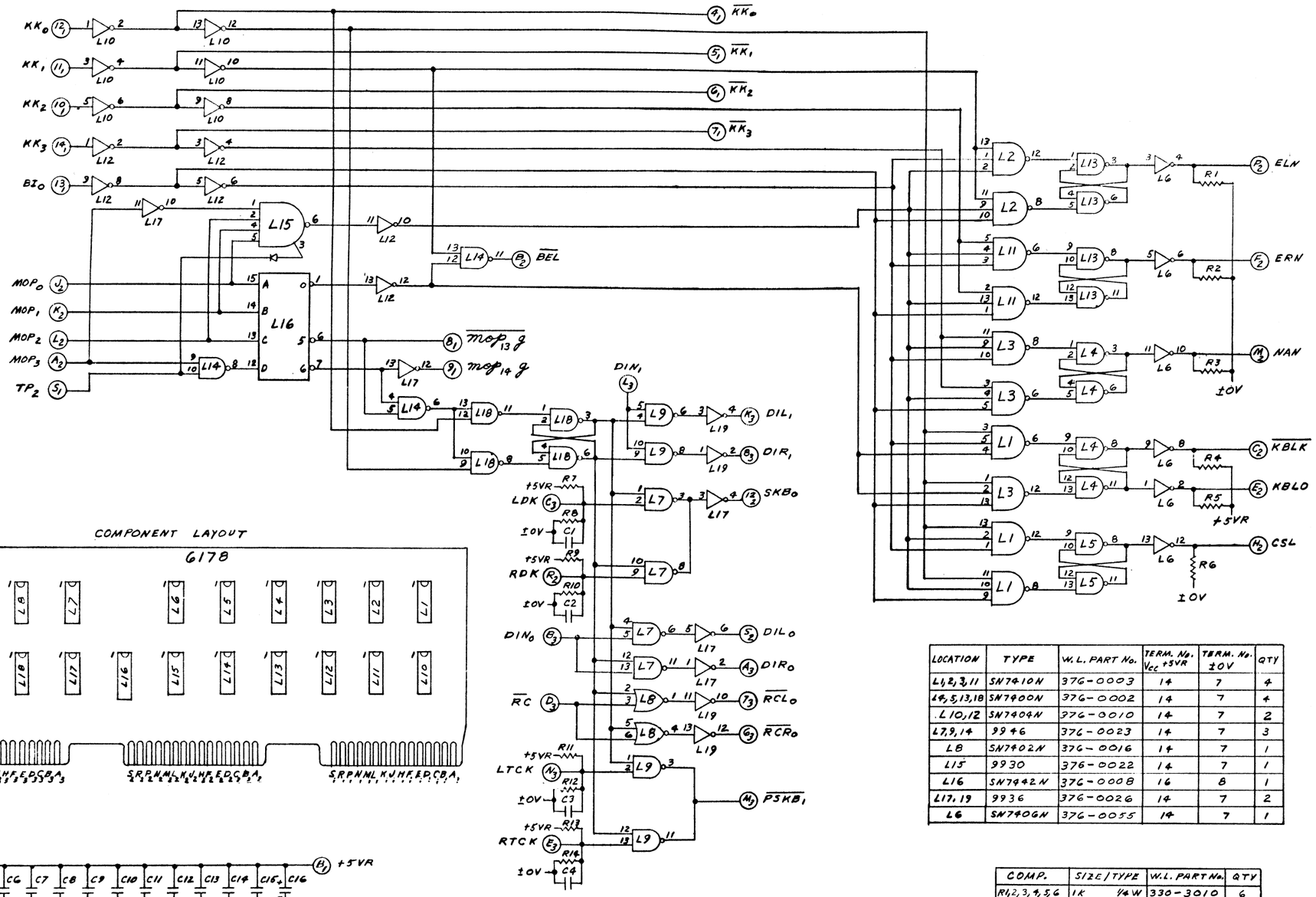

COMPONENT LAYOUT

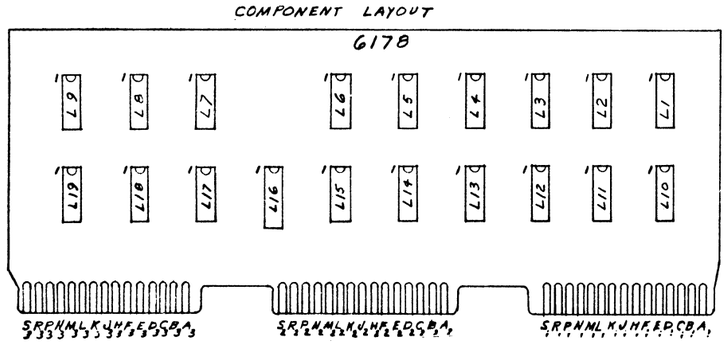

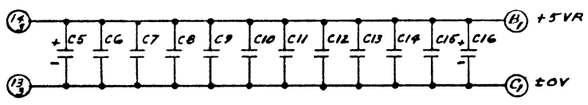

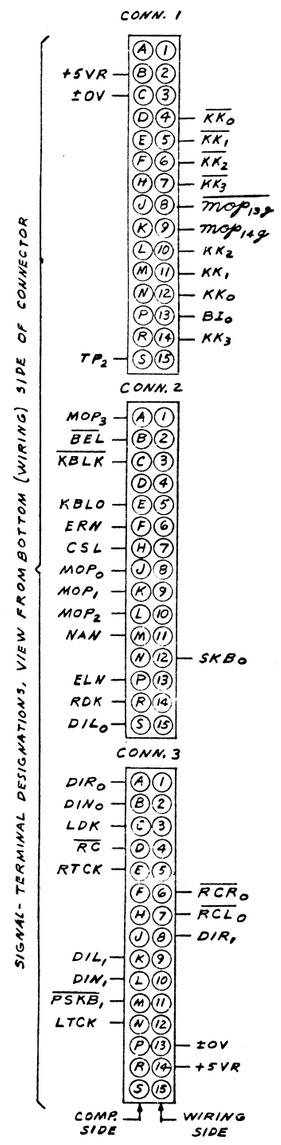

LOCATION	TYPE	W.L. PART No.	TERM. No. V_{CC} +5VR	TERM. No. ±0V	QTY
L1,2,3,11	SN7410N	376-0003	14	7	4
L4,5,13,18	SN7400N	376-0002	14	7	4
L10,12	SN7404N	376-0010	14	7	2
L7,9,14	9946	376-0023	14	7	3
L8	SN7402N	376-0016	14	7	1
L15	9930	376-0022	14	7	1
L16	SN7442N	376-0008	16	8	1
L17,19	9936	376-0026	14	7	2
L6	SN7406N	376-0055	14	7	1

COMP.	SIZE/TYPE	W.L. PART No.	QTY
R1,2,3,4,5,6	1K 1/4W	330-3010	6
R7,9,11,13	3.9K 1/4W	330-3039	4
R8,10,12,14	47K 1/4W	330-4047	4
C1,2,3,4	47pf	330-1047	4
C5,16	10μf 16VDC	300-3006	2
C6,7,8,9,10,11,12,13,14,15	.02μf	300-1904	10

WANG LABORATORIES INC.
TEWKSBURY, MASS.

MODEL NO.	DRAWN	CHECKED	APP.	APP.
1200	11/16/71			3/10/72

TITLE: SCHEMATIC LOGIBLOC #6178 TAPE INPUT CONTROL

SHT OF | DWG. NO. D 6178-1 | REV.

REVISION | DATE | BY

DO NOT SCALE

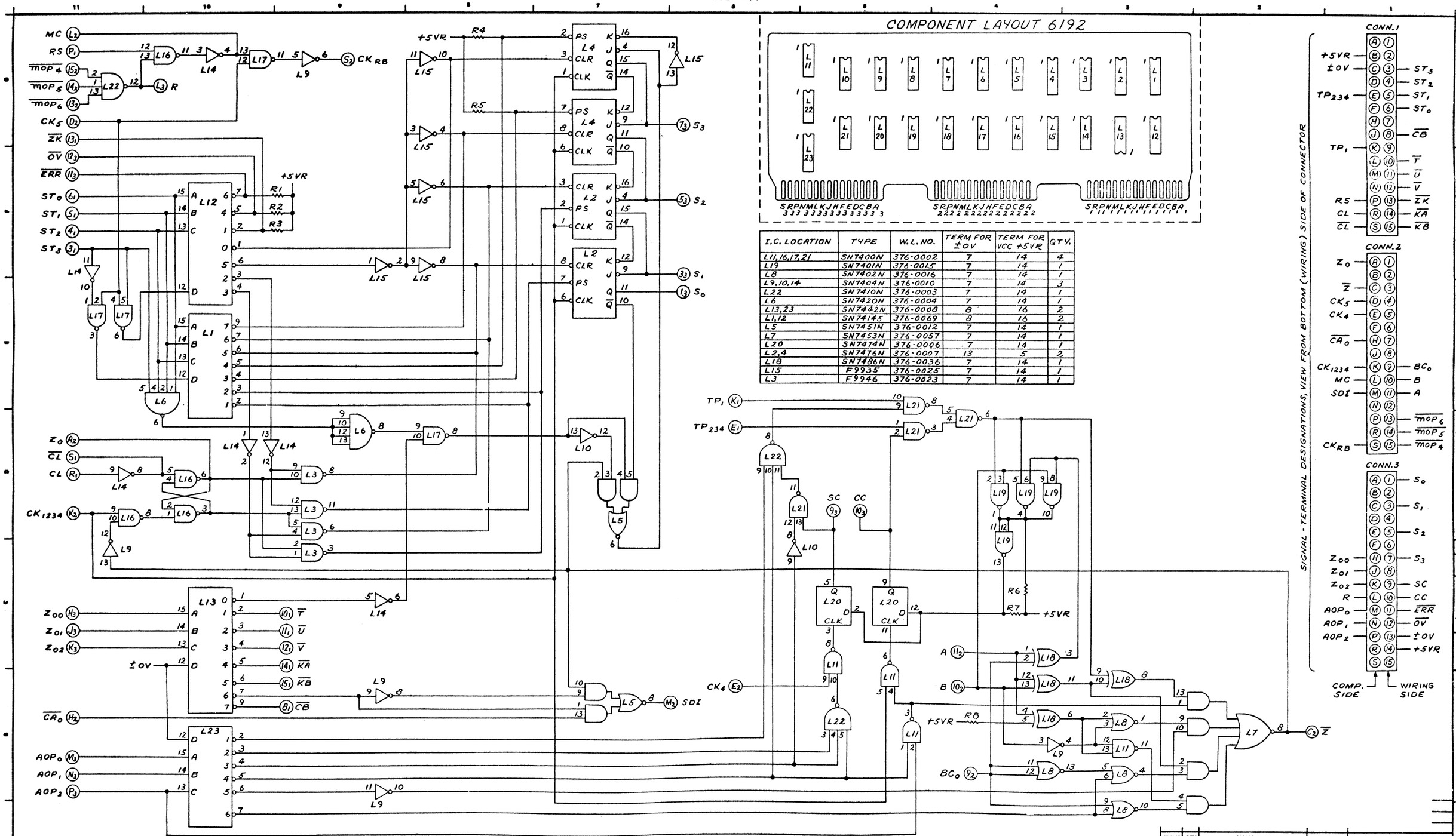

I.C. LOCATION	TYPE	W.L.NO.	TERM FOR ±OV	TERM FOR VCC +5VR	QTY.
L11,16,17,21	SN7400N	376-0002	7	14	4
L19	SN7401N	376-0015	7	14	1
L8	SN7402N	376-0016	7	14	1
L9,10,14	SN7404N	376-0010	7	14	3
L22	SN7410N	376-0003	7	14	1
L6	SN7420N	376-0004	7	14	1
L13,23	SN7442N	376-0008	8	16	2
L1,12	SN74145	376-0069	8	16	2
L5	SN7451N	376-0012	7	14	1
L7	SN7453N	376-0057	7	14	1
L20	SN7474N	376-0006	7	14	1
L2,4	SN7476N	376-0007	13	5	2
L18	SN7486N	376-0036	7	14	1
L15	F9935	376-0025	7	14	1
L3	F9946	376-0023	7	14	1

COMPONENT	TYPE & SIZE	W.L.NO.	QTY.
R1,2,3,4,5	1K 1/4 W	330-3010	5
R6	680Ω 1/4 W	330-2068	1
R7	2.2K 1/4 W	330-3022	1
R8	10K 1/4 W	330-4010	1
C1,2,3,4,5,6,7	.05μf 12V CER.	300-1900	7
C8,9	10μf 15V ELECT.	300-3006	2

IDENT	QTY	NAME	MATERIAL	DESCRIPTION

TOL. EX. AS NOTED .XX ±.010 .XXX ±.005 ANG. ±0°30' FRAC. ±1/64 FINISH

MATERIAL

FINISH

WANG LABORATORIES, INC. TEWKSBURY, MASS. U.S.A.

DR F.S.S. DATE 2-16-72

CHK DATE

APPD DATE 3/17/72

MODEL No. 1200 W.O. No. SCALE SHEET OF

TITLE SCHEMATIC LOGIBLOC #6192-1 ALU

PART NUMBER REV SIZE D DRAWING NUMBER 6192-1

REVISION BY DATE NO.

DO NOT SCALE

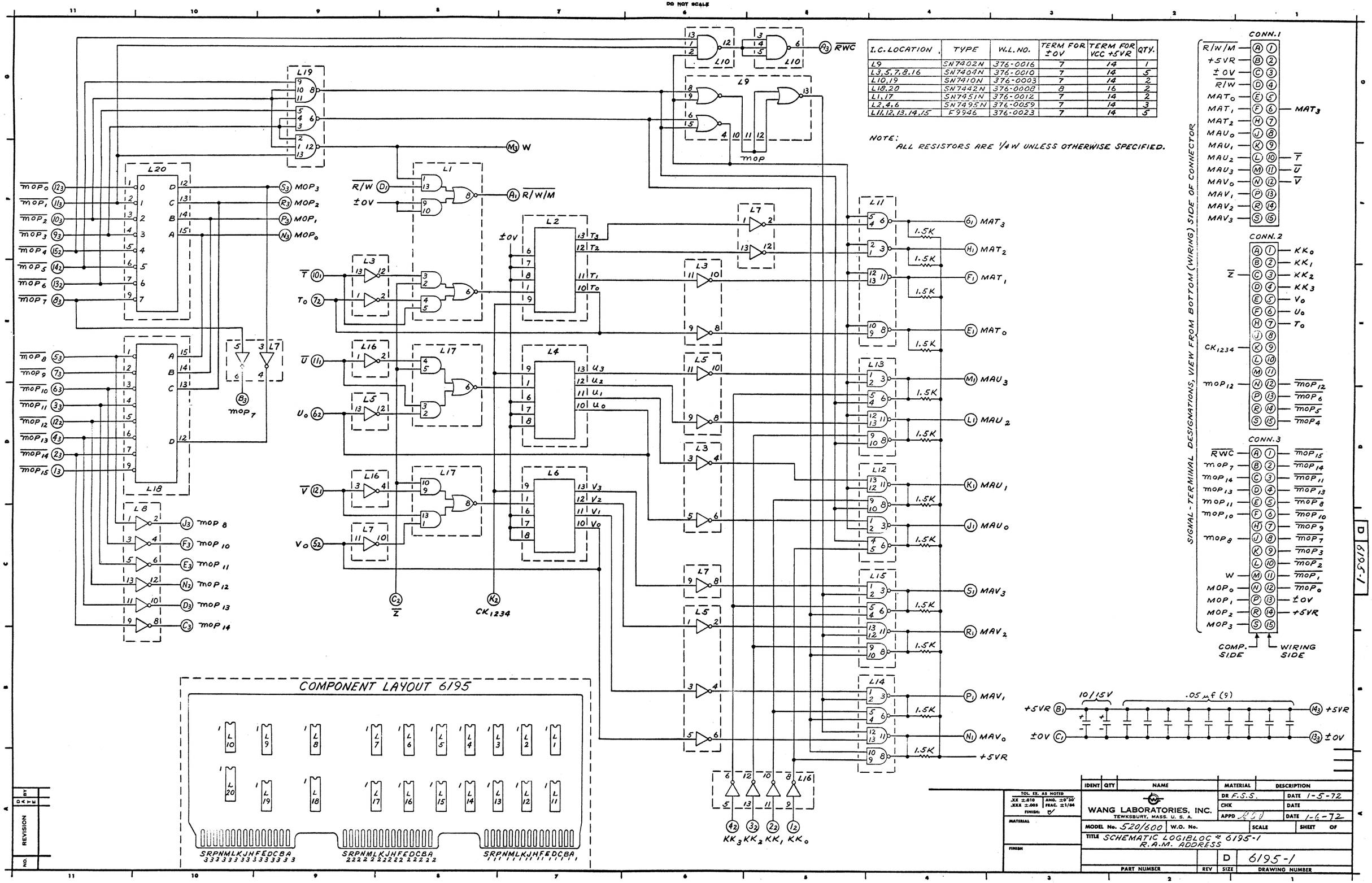

I.C. LOCATION	TYPE	W.L. NO.	TERM FOR ±0V	TERM FOR VCC +5VR	QTY.
L9	SN7402N	376-0016	7	14	1
L3,5,7,8,16	SN7404N	376-0010	7	14	5
L10,19	SN7410N	376-0003	7	14	2
L18,20	SN7442N	376-0008	8	16	2
L1,17	SN7451N	376-0012	7	14	2
L2,4,6	SN7495N	376-0059	7	14	3
L11,12,13,14,15	F9946	376-0023	7	14	5

NOTE:
ALL RESISTORS ARE 1/4 W UNLESS OTHERWISE SPECIFIED.

IDENT	QTY	NAME	MATERIAL	DESCRIPTION

TOL. EX. AS NOTED: .XX ±.010, .XXX ±.005, ANG. ±0°30', FRAC. ±1/64; FINISH:

MATERIAL

FINISH

WANG LABORATORIES, INC.
TEWKSBURY, MASS. U. S. A.

DR F.S.S. DATE 1-5-72
CHK DATE
APPD RSJ DATE 1-6-72

MODEL No. 520/600 W.O. No. SCALE SHEET OF

TITLE SCHEMATIC LOGIBLOC # 6195-1
R.A.M. ADDRESS

PART NUMBER REV SIZE D DRAWING NUMBER 6195-1

REVISION NO. BY DATE

THIS DOCUMENT IS THE PROPERTY OF WANG LABORATORIES, INC. AND SHALL NOT BE RE-PRODUCED OR COPIED, OR USED AS A BASIS FOR THE MANUFACTURE OR SALE OF APPARATUS OR SERVICE WITHOUT PERMISSION.

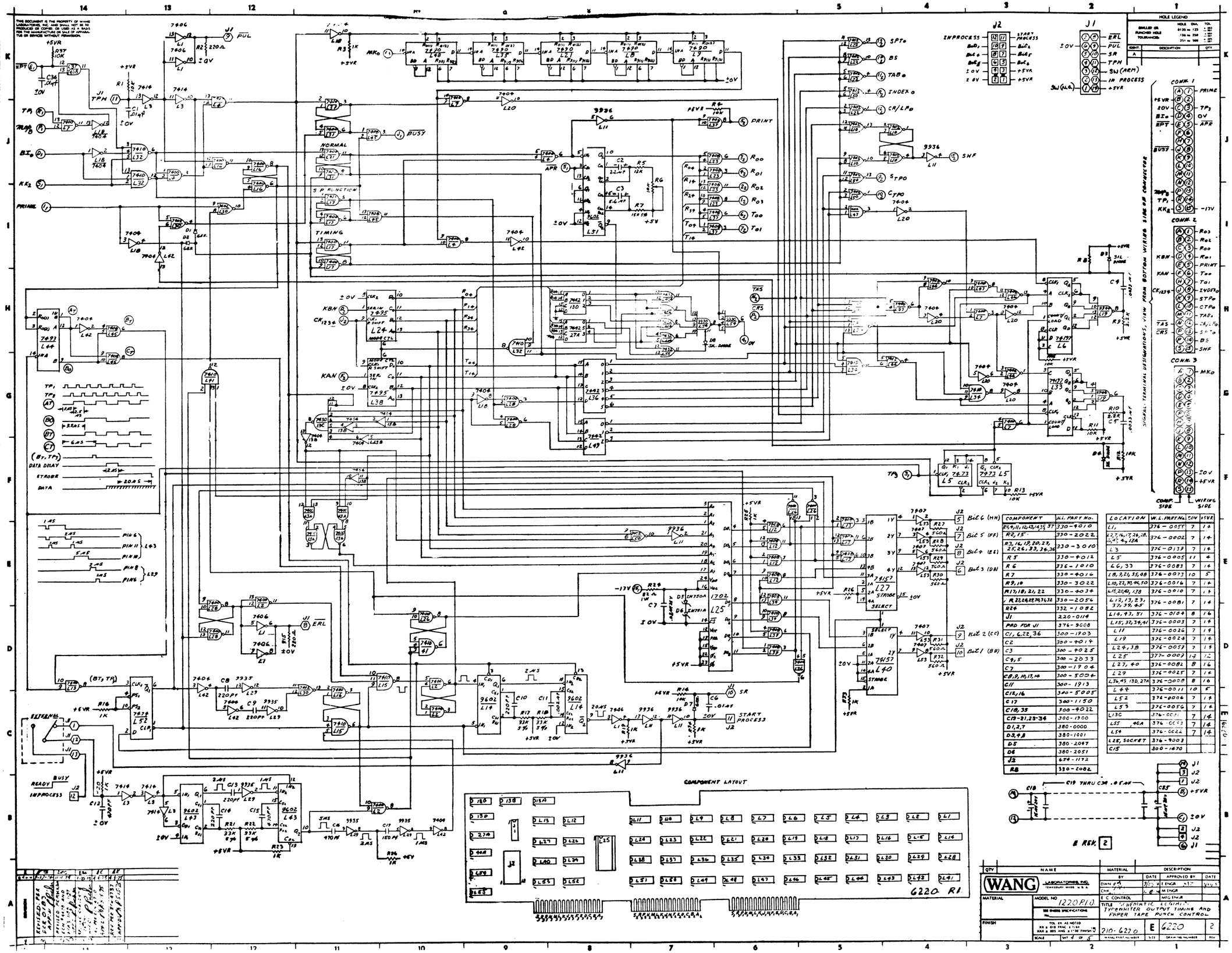

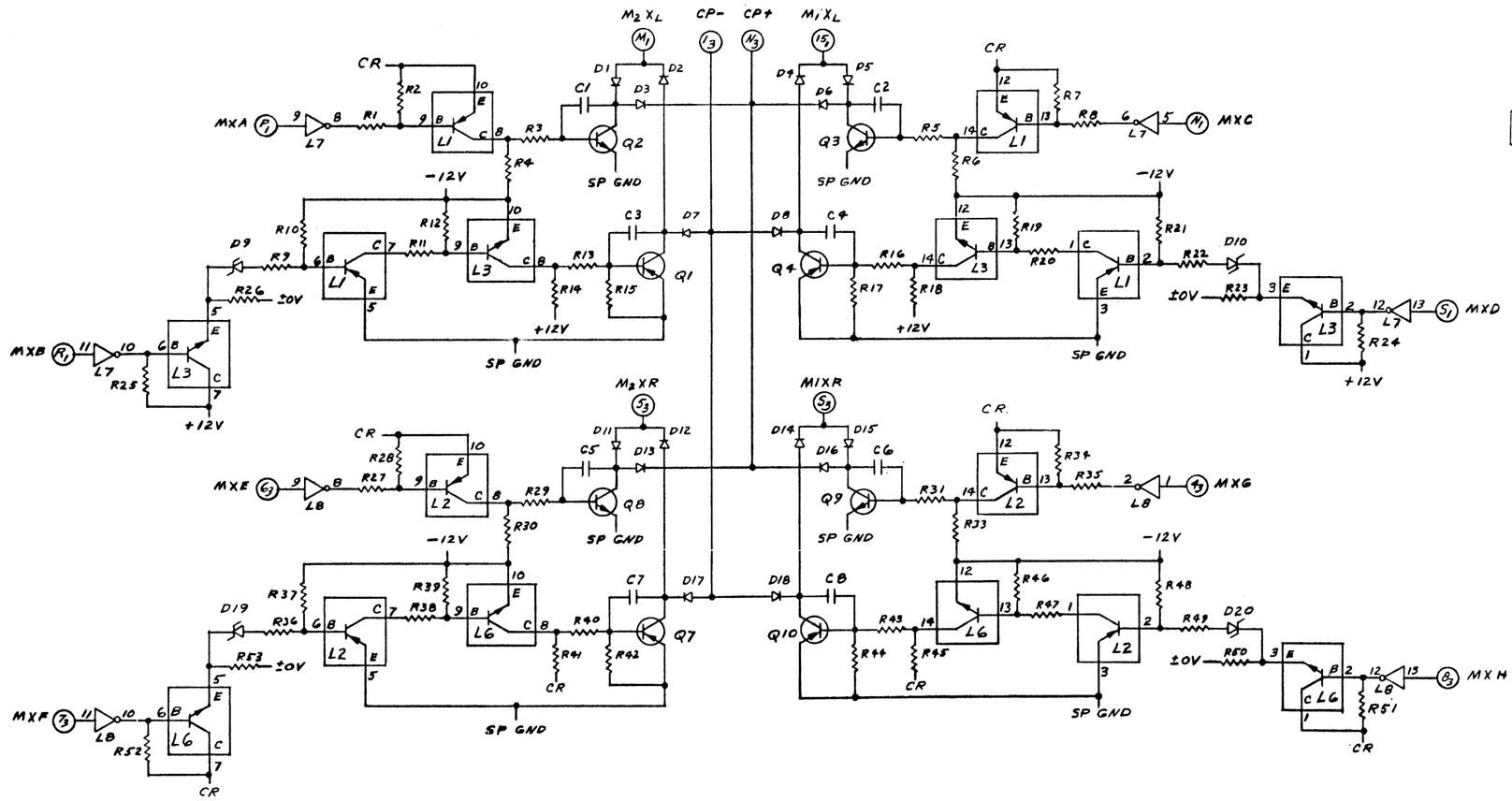

COMPONENT	SIZE/TYPE	W.L. PART No.	QTY
R1,8,15,17,27,35,42,49,57,59	1K ¼W	330-3010	10
R2,7,23,24,25,26,28,34,50,51,52,53,56,65,66	2.2K ¼W	330-3022	15
R3,5,29,31,54	100Ω 2W	337-2010	5
R4,6,12,19,30,33,39,46,55,61	47K ¼W	330-4047	10
R9,22,36,43,64	3.3K ¼W	330-3033	5
R10,14,18,21,37,41,45,48,60,63	10K ¼W	330-4010	10
R11,20,38,42,62	1.2K ¼W	330-3012	5
R13,16,40,43,58	150Ω 1W	332-2015	5
R32	33Ω 1W	332-1033	1
R67	150Ω ¼W	330-2015	1
C1,2,3,4,5,6,7,8	.1μf MYLAR	300-2210	8
C9,10,12,13	.02μf	300-1904	4
C11,14	10μf 16VDC	300-3006	2
D1,2,3,4,5,6,7,8,11,12,13,14,15,16,17,18,21,22	EM403	380-4000	18
D9,10,19,20,23	ZENER 5.6V	380-2056	5
D24	ZENER 12V	380-2121	1
Q1,4,5,7,10	2N5954	375-1032	5
Q2,3,6,8,9	2N4050V1	375-1028	5
Q11	2N4234	375-1024	1

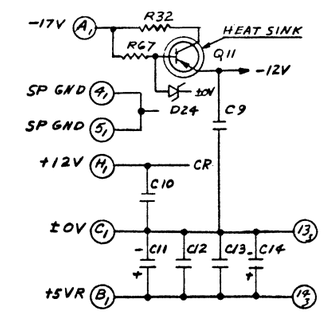

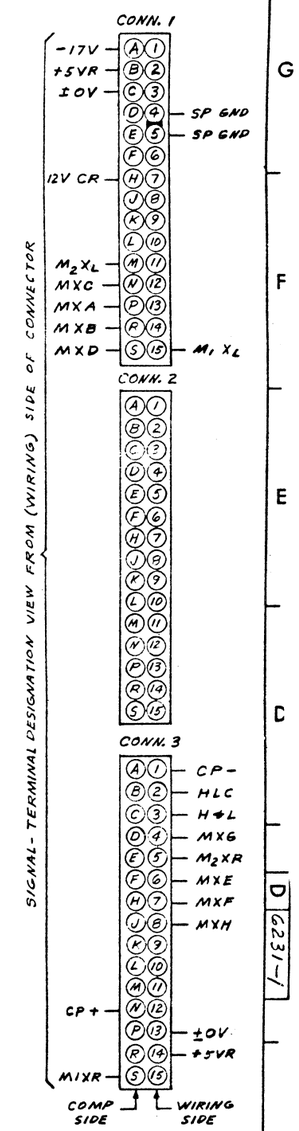

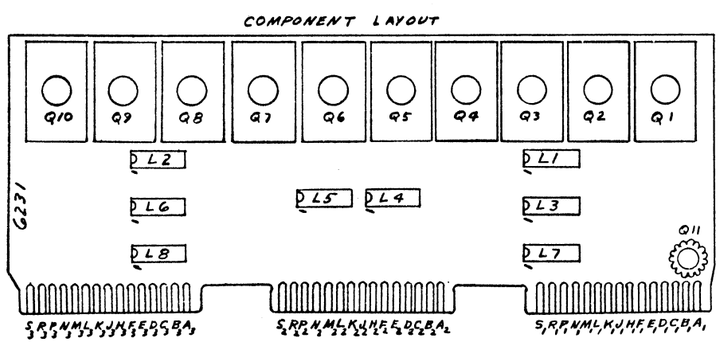

LOCATION	TYPE	W.L. PART No.	TERM. No. V_{CC} +5VR	TERM. No. ±0V	QTY
L1, 2, 4	FPQ3468				3
L3, 5, 6	FPQ3725				3
L7, 8	SN7406N	376-0055	14	7	2

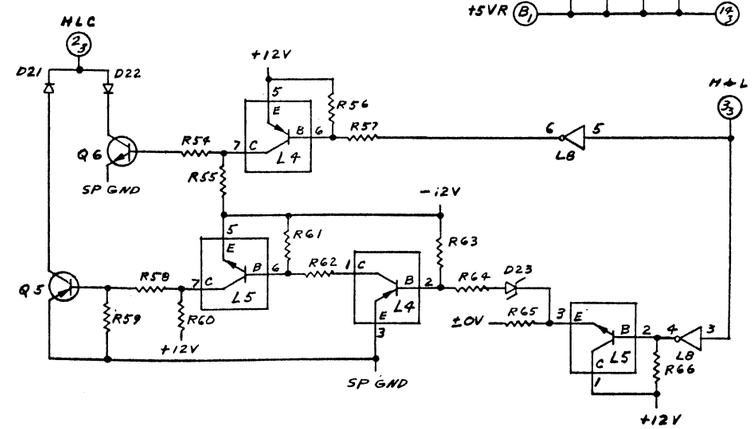

REV	BY	DATE	REVISION
1		8-26-72	REVISED PER RFAE 0356 APP'D

WANG LABORATORIES INC.
TEWKSBURY, MASS.

MODEL NO.	DRAWN	CHECKED	APP.	APP.
1200	2-2-71			3/7/72

TITLE SCHEMATIC LOGIBLOC #6231 TAPE MOTOR CONTROL

SHT OF | DWG. NO. D 6231-1 | REV. 1

THIS DOCUMENT IS THE PROPERTY OF WANG LABORATORIES, INC. AND SHALL NOT BE REPRODUCED OR COPIED OR USED AS A BASIS FOR THE MANUFACTURE OR SALE OF APPARATUS OR DEVICES WITHOUT PERMISSION.

DO NOT SCALE

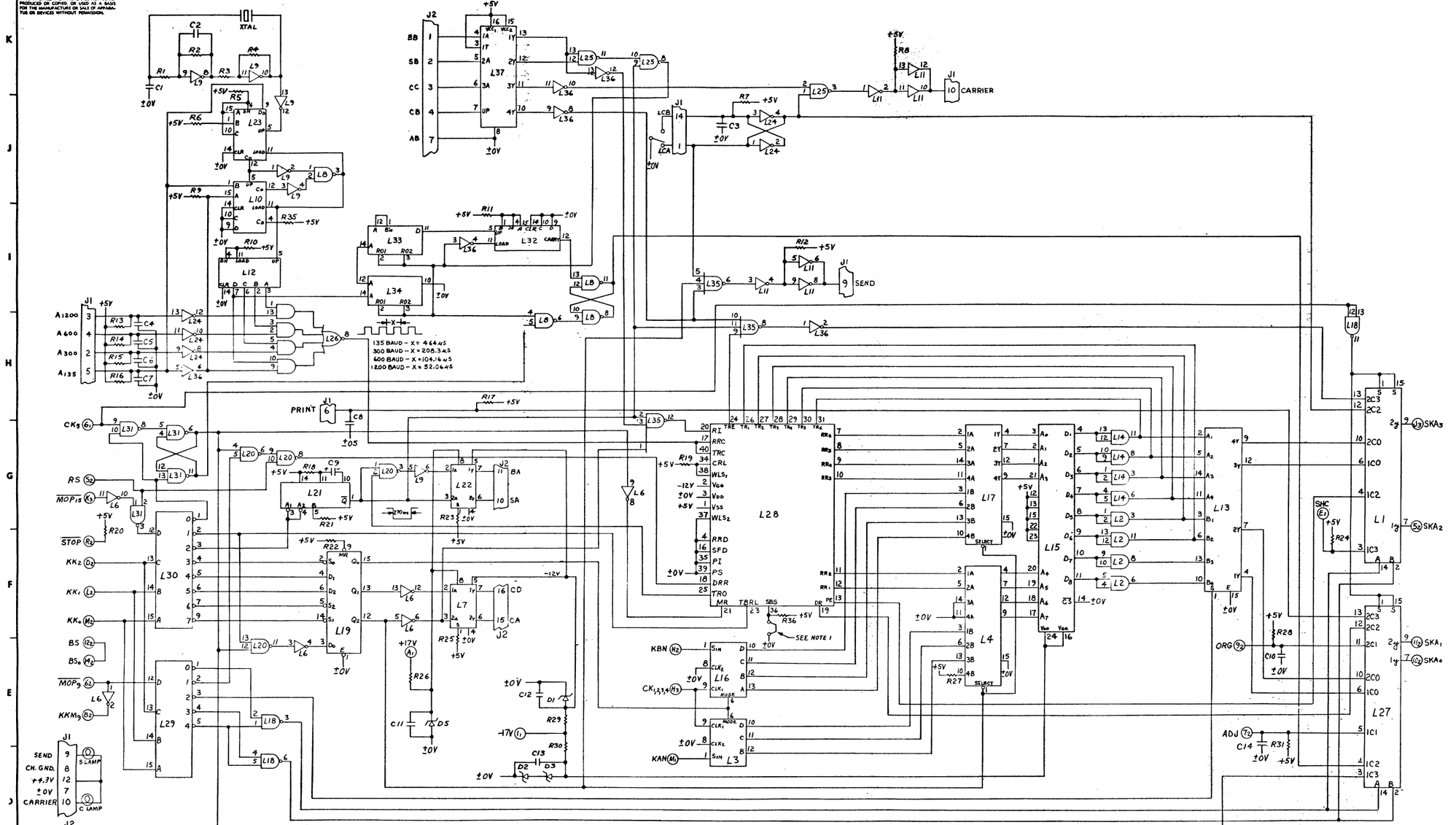

HOLE LEGEND		
DRILLED OR PUNCHED HOLE TOLERANCES	HOLE DIA.	TOL.
	.0135 to .125	+.002 -.000
	.126 to .250	+.003 -.000
	.251 to .500	+.005 -.000
IDENT	DESCRIPTION	QTY
A		

J2

1 – BB – RECEIVED DATA
2 – SB – SUPERVISORY RECEIVED DATA
3 – CC – DATA SET READY
4 – CB – CLEAR TO SEND
5
6
7 – AB – SIGNAL GROUND
8 – CF – CARRIER DETECTOR
9
10 – SA – SUPERVISORY TRANSMITTED DATA
11 – BA – TRANSMITTER DATA
12
13
14
15 – CA – REQUEST TO SEND
16 – CD – DATA TERMINAL READY

J1

1 – LCB
2 – A300
3 – A1200
4 – A600
5 – A135
6 – PRINT
7 – ±0V
8
9 – SEND
10 – CARRIER
11
12 – +4.3V
13
14 – LCA

1. REMOVE JUMPER WHEN TWO STOP BITS ARE USED.

NOTES

REVISION				
1	PER ECN-3863 ADDED DC APPLN	DN 11-1-73	DN 11-6-73	
2	PER ECN-3886 ADDED D2 IN INDICATOR & TYPO	DN 11-20-73	DN 11-20-73	
3	PER ECN-3968 ADDED R36 & TYPO	DN 12-11-73	DN 12-11-73	
4	REV. PER RFA 0855	DN 1-10-74	DN 1-10-74	
5	REVISED PER ECN-4 & RFA 0855	DN 1-24-74	DN 1-24-74	
6	REVISED PER ECN-4 & RFA 0855	DN 1-24-74	DN 1-24-74	

COMPONENT	SIZE/TYPE	W.L. PART NO.	QTY.
R1,3	220Ω ¼W	330-2022	2
R2	180Ω ¼W	330-2018	1
R4	1.8K ¼W	330-3018	1
R5,6,9,10,11,19,21,22,27,35,36	1K ¼W	330-3010	11
R7,13-17,34	4.7K ¼W	330-3047	7
R8,12	2.2K ¼W	330-3022	2
R20,23,24,25,28,31,32,33	10K ¼W	330-4010	8
R26,29	82Ω 1W	332-1082	2
R30	100Ω 1W	332-2010	1
C1,2	47pf	300-1047	2
C3-8	.01µf	300-1903	6
C9	33µf,35V,TANT	300-4029	1
C10,14,15,17	220pf	300-1220	4
C11-13,18-30	.05µf	300-1900	16
C16	560pf	300-1560	1
C31,32	15µf,20V,TANT	300-4022	2
D1,D5	IN4742,12V	380-2121	2
D3	IN751A,5.1V	380-2051	1
D2	IN750A,4.7V	380-2047	1
D4	30V SIL	380-10014B	1
14PIN	TELE COMM. CABLE	220-0114	1
	24PIN SOCKET	376-9003	1
	40PIN SOCKET	376-9011	1
6237	P.C. BOARD	5106237	1
XTAL	AMC OSCIL.	321-0009	1
	1762 CLR. LAMP	370-0002	2
D6	DIODE SIL	380-1004	1
R18	12K ¼W	330-4012	1

COMPONENT	SIZE/TYPE	W.L. PART NO.	QTY.
16PIN SOCKET	CAMBION	376-9005	1
I.C. PAD	16PIN	376-9008	1

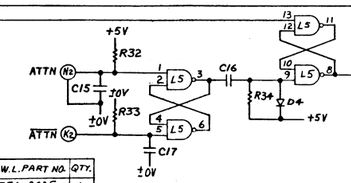

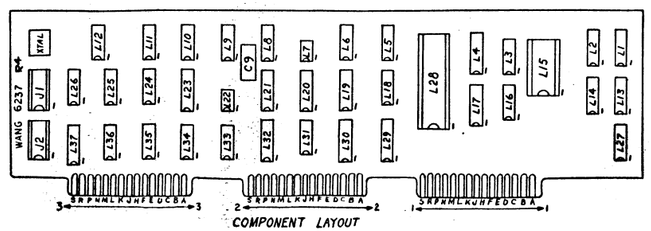

LOCATION	TYPE	W.L. PART NO.	TERM. NO. ±0V	TERM. NO. +5V	QTY
L1,27	SN74153N	376-0048	8	16	2
L2,14	SN7408N	376-0081	7	14	2
L3,16	SN7495N	376-0059	14	7	2
L4,13,17	SN74157N	376-0082	8	16	3
L5,25	9946	376-0023	7	14	2
L6,9,36	SN7404N	376-0010	7	14	3
L7,22	SN75150N	376-0076	12	24	2
L8,18,20,31	SN7400N	376-0002	7	14	4
L10,12,23,32	SN74193N	376-0053	8	16	4
L11	SN7406N	376-0055	7	14	1
L15	1702 INTEL	377-0009	14	12	1
L19	9314	376-0108	8	16	1
L21	SN74121N	376-0051	7	14	1
L24	9936	376-0026	7	14	1
L26	SN7453N	376-0057	7	14	1
L28	1402A	377-0071	3	1	1
L29,30	SN7442N	376-0008	8	16	2
L33,34	SN7493N	376-0011	10	5	2
L35	SN7410N	376-0003	7	14	1
L37	SN75154N	376-0077	8	15/16	1

WANG PART NO	ITEM	QTY	NAME	MATERIAL	DESCRIPTION
			WANG LABORATORIES, INC. TEWKSBURY, MASS. U.S.A.		BY / DATE / APPROVED BY / DATE
					DWN / CHK / E ENGR / M ENGR
			MODEL NO. 1200		E C CONTROL / MFG ENGR
			SEE ENGR'G SPECIFICATIONS No.		TITLE SCHEMATIC LOGIBLOC # 6237 COMMUNICATION BOARD
			FINISH	TOL EX AS NOTED .XX ± .015 .XXX ± .010 .XXX ± .005 ANG ± 0°-30' FINISH 16	
			SCALE / SHT / OF	WANG PART NUMBER / SIZE / DRAWING NUMBER / REV.	E 6237-1 6

REV. 4

DO NOT SCALE

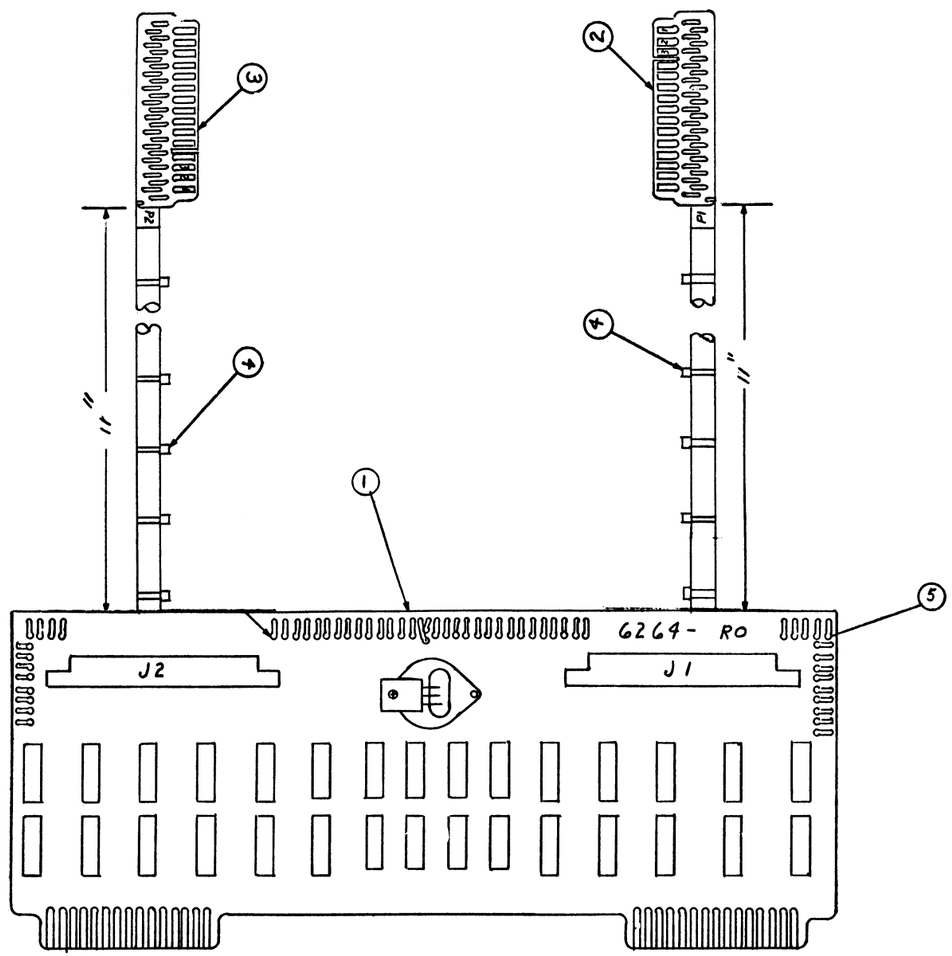

WANG PART NO.	ITEM	QTY.	NAME	MATERIAL	DESCRIPTION
660-0201	5	A/R	SOLDER		63-37 ALLOY
605-1006	4	A/R	CABLE TYE		
220-0112	3	1	DUAL R.O.M. P2 CONN. CABLE		DWG. C6406-177
220-0111	2	1	DUAL R.O.M. P1 CONN. CABLE		DWG. C6406-176
210-6264	1	1	DUAL R.O.M. CONTROL		DWG E6264-1

Qty. Per Unit	FIRST USED ON	ASSY USED ON

WANG LABORATORIES, INC. TEWKSBURY, MASS. U.S.A.

MATERIAL

FINISH

MODEL NO. 1200

SEE ENGRG SPECIFICATIONS No.

TOL. EX. AS NOTED .XX ± .010 FRAC. ± 1/64 .XXX ± .005 ANG. ± 1°30' FINISH 125

SCALE | SHT 2 OF 2

BY	DATE	APPROVED BY	DATE
DWN	8/24/73	E ENGR	9/4/73
CHK		M ENGR	
E. C. CONTROL		MFG ENGR	

TITLE P1 & P2 CABLE ASSEMBLY

WANG PART NUMBER	SIZE	DRAWING NUMBER	REV.
	D	6264-1	1

NO.	REVISION	DATE	BY
1	REVISED PER ECN #5232 APP: D. SWIB	11-6-77	PB

D 6264-1

B

A

THIS DOCUMENT IS THE PROPERTY OF WANG LABORATORIES, INC. AND SHALL NOT BE REPRODUCED OR COPIED, OR USED AS A BASIS FOR THE MANUFACTURE OR SALE OF APPARATUS OR DEVICES WITHOUT PERMISSION.

DO NOT SCALE

HOLE LEGEND

	HOLE DIA.	TOL.
DRILLED OR PUNCHED HOLE TOLERANCES:	.0135 to .125	±.003
	.126 to .250	±.004
	.251 to .500	±.005

IDENT.	DESCRIPTION	QTY.
A		

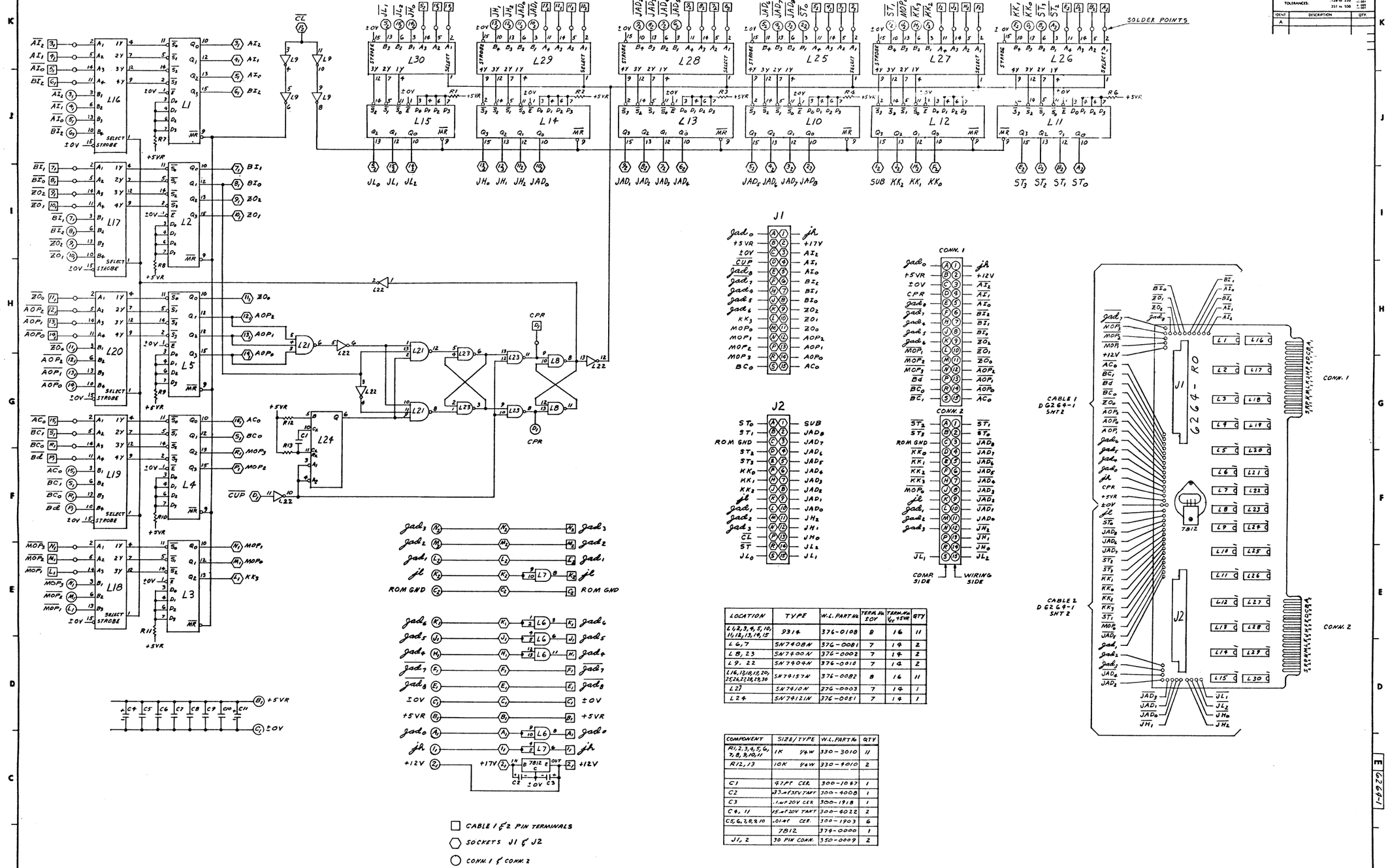

LOCATION	TYPE	W.L. PART No.	TERM. No. ±0V	TERM. No. +5VR	QTY
L1,2,3,4,5,10, 11,12,13,14,15	9314	376-0108	8	16	11
L6,7	SN7408N	376-0081	7	14	2
L8,23	SN7400N	376-0002	7	14	2
L9,22	SN7404N	376-0010	7	14	2
L16,17,18,19,20, 25,26,27,28,29,30	SN74157N	376-0082	8	16	11
L21	SN7410N	376-0003	7	14	1
L24	SN74121N	376-0051	7	14	1

COMPONENT	SIZE/TYPE	W.L. PART No.	QTY
R1,2,3,4,5,6, 7,8,9,10,11	1K 1/4W	330-3010	11
R12,13	10K 1/4W	330-9010	2
C1	47PF CER.	300-1067	1
C2	33mf35V TANT.	300-4008	1
C3	.1mf20V CER	300-1918	1
C4, 11	15mf20V TANT	300-4022	2
C5,6,7,8,9,10	.01MF CER.	300-1903	6
	7812	374-0000	1
J1, 2	30 PIN CONN.	350-0009	2

☐ CABLE 1 & 2 PIN TERMINALS

⬡ SOCKETS J1 & J2

○ CONN. 1 & CONN. 2

WANG PART NO	ITEM	QTY	NAME	MATERIAL	DESCRIPTION
			WANG LABORATORIES, INC. TEWKSBURY MASS. U.S.A.		

	BY	DATE	APPROVED BY	DATE
DWN	JB	8-29-72	E ENGR	9/1/73
CHK			M ENGR	
E C CONTROL			MFG ENGR	

MATERIAL

MODEL NO. 1200

SEE ENGRG SPECIFICATIONS No.

FINISH

TOL. EX. AS NOTED
XX ± .010-FRAC ± 1/64
XXX ± .005 ANG ± 1°30' FINISH 16

SCALE | SHT 1 OF 2

TITLE SCHEMATIC, LOGIBLOC 6264 DUAL ROM CONTROL

WANG PART NUMBER | SIZE E | DRAWING NUMBER 6264-1 | REV

REVISION

6264-1

THIS DOCUMENT IS THE PROPERTY OF WANG LABORATORIES, INC. AND SHALL NOT BE RE-PRODUCED OR COPIED, OR USED AS A BASIS FOR THE MANUFACTURE OR SALE OF APPARATUS OR DEVICES WITHOUT PERMISSION.

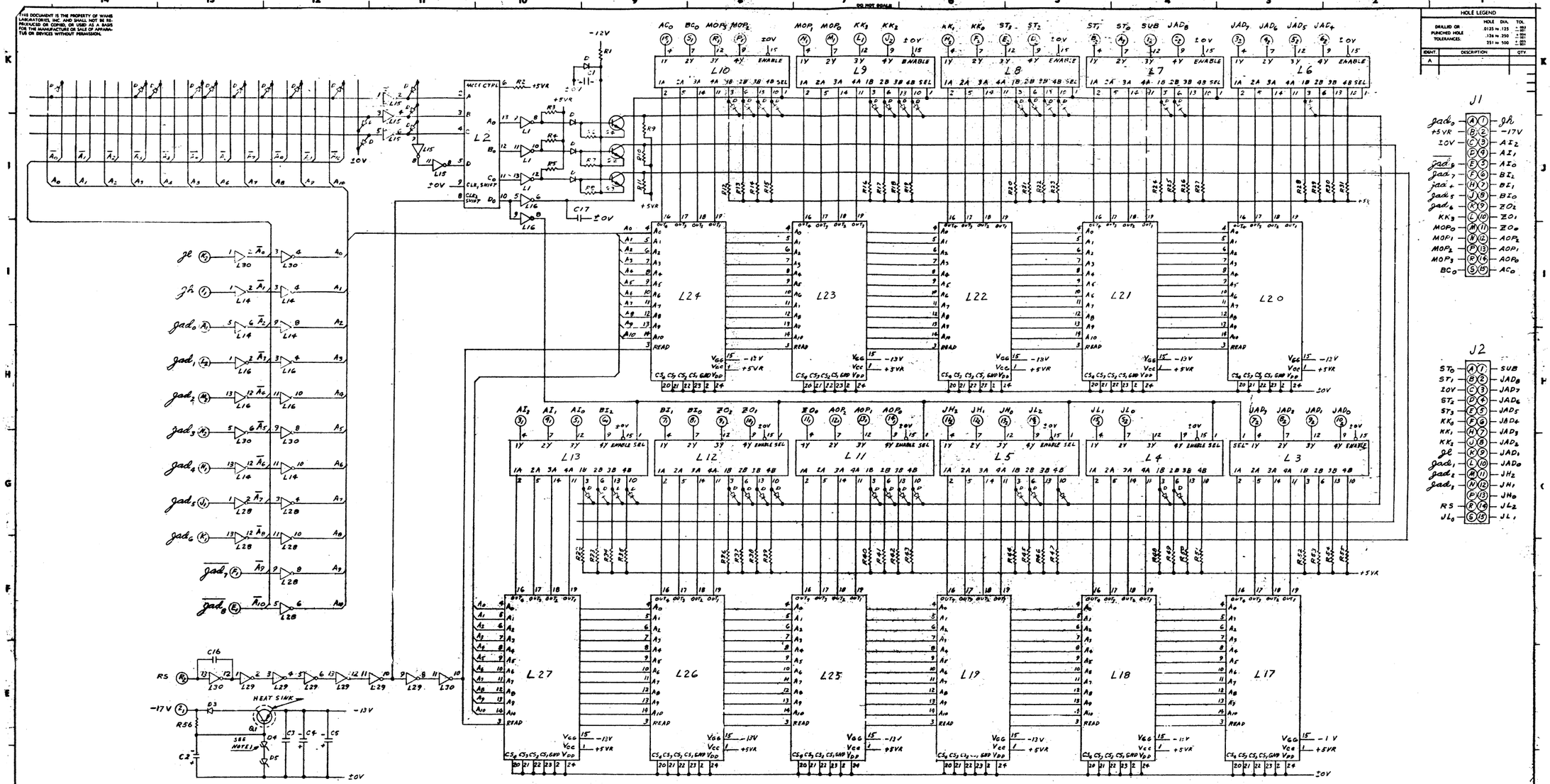

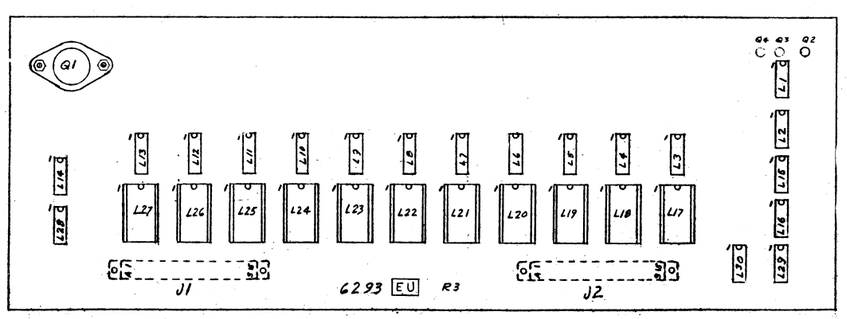

COMPONENT	SIZE/TYPE	W.L. PART NO.	QTY
R1	120Ω 2W	237-2012	1
R2, 12 THRU 55	10K ¼W	330-4010	45
R3, 4, 5	680Ω ¼W	330-2068	3
R6, 7, 8	1K ¼W	330-3010	3
R9, 10, 11	4.7K ¼W	330-3047	3
R56	120Ω ½W	331-2012	1
C16	47pf CER	300-1047	1
C1	33uf 35V TANT	300-4039	1
C2	1000uf 25V ELECT	300-3033	1
C3	.02uf CER	300-1906	1
C4, 6	10uf 35V TANT	300-4032	2
C5, 15	15uf 20V TANT	300-4022	1
C7, 8, 9, 10, 11, 12, 13, 14	.05uf CER	300-1900	8
C17	390pf CER	300-1390	1
D	DIODE SIL	380-1001	50
D3	EM 403	380-4000	1
D4	1N755A 7.5V	380-2075	1
	1N794A 6.8V	380-2068	1
D5	1N794A 6.8V	380-2068	1
Q1	2N6246	375-1029	1
Q2, 3, 4	2N3014	375-0017	3
J1, 2	CINCH JONES CONN	350-4118	2
L17 THRU L27	24 PIN SOCKET	376-9003	11

SEE NOTE 2

LOCATION	TYPE	W.L. PART No.	TERM. No ±0V	TERM. No +5VR	QTY
L1	SN7406N	376-0055	7	14	1
L2	SN7495N	376-0059	7	14	1
L3, 4, 5, 6, 7, 8, 9, 10, 11, 12, 13	SN74157N	376-0082	8	16	11
L14, 16, 28, 29, 30	SN7400N	376-0010	7	14	5
L15	9935	376-0023	7	14	1

LOCATION	W.L. NO.	VENDOR NO.	W.L. NO.	VENDOR NO.
L17	377-0114	CM5990N	377-0217	CM8300N
L18	377-0116	CM6010N	377-0218	CM8310N
L19	377-0115	CM6000N	377-0219	CM8320N
L20	377-0113	CM5980N	377-0216	CM8290N
L21	377-0112	CM5970N	377-0215	CM8280N
L22	377-0111	CM5960N	377-0214	CM8270N
L23	377-0110	CM5950N	377-0213	CM8260N
L24	377-0109	CM5940N	377-0212	CM8250N
L25	377-0108	CM5930N	377-0211	CM8240N
L26	377-0107	CM5920N	377-0210	CM8230N
L27	377-0106	CM5910N	377-0209	CM8220N
P.C. BOARD LABELING	US		EU	

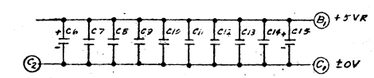

NOTE
1. ADJUST THE D4 DIODE FOR AN OUTPUT OF -12.8 VOLTS MINIMUM TO -13.4 VOLTS MAXIMUM ON -13 VOLT BUSS LINE.

E-REV 3

REV		DR	M.F.	K.S.	K.S.	K.S.
8	REVISED PER ECO 4-4-74	4-4-74	4-4-74	K.S.	4-5-74	4-5-74
7	REVISED PER ECO 4-4-74					
6	REVISED PER E.C. 4-4-74		4-4-74			
5	REVISED PER ECO 3-20-74					
4	REVISED PER ECO 3-20-74					
3	REVISED PER ECO 3-20-74					

WANG PART NO.	FIRST USED ON	ASSY USED ON	ITEM	QTY.	NAME	MATERIAL	DESCRIPTION
					WANG LABORATORIES, INC. TEWKSBURY, MASS. U.S.A.	BY / DATE / APPROVED BY / DATE	
						DWN. / 8-16-73 / E ENGR. / 9/4/73	
						CHK /	M ENGR
						E. C. CONTROL	MFG ENGR
					MATERIAL	MODEL NO. 1200	TITLE SCHEMATIC, LOGIBLOC 6293 SOLID STATE R.O.M.
						SEE ENGRG SPECIFICATIONS No.	
					FINISH	TOL. EX. AS NOTED .XX ± .010 FRAC. ± 1/64 .XXX ± .005 ANG. ± 1/2° 32 FINISH	210-6293 / E / 6293 / 5
						SCALE / SHT. OF	WANG PART NUMBER / SIZE / DRAWING NUMBER / REV.

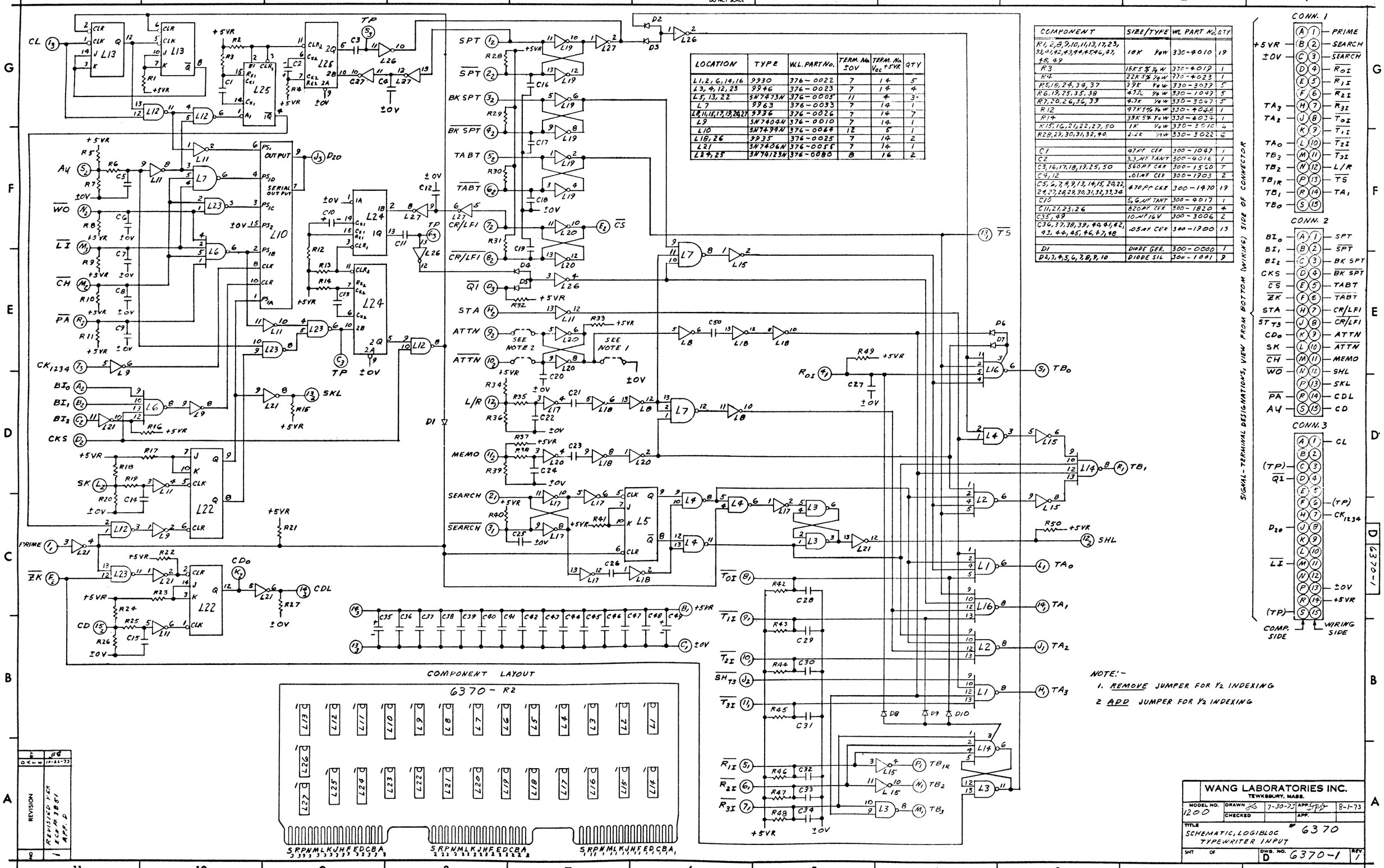

LOCATION	TYPE	W.L. PART No.	TERM. No. ±0V	TERM. No. V_{cc} +5VR	QTY
L1, 2, 6, 14, 16	9930	376-0022	7	14	5
L3, 4, 12, 23	9946	376-0023	7	14	4
L5, 13, 22	SN7473N	376-0005	11	4	3
L7	9963	376-0033	7	14	1
L8, 11, 15, 17, 19, 20, 21	9936	376-0026	7	14	7
L9	SN7404N	376-0010	7	14	1
L10	SN7494N	376-0064	12	5	1
L18, 26	9935	376-0025	7	14	2
L21	SN7406N	376-0055	7	14	1
L24, 25	SN76123N	376-0080	8	16	2

COMPONENT	SIZE/TYPE	WL PART No.	QTY
R1, 2, 8, 9, 10, 11, 13, 17, 23, 33, 41, 42, 43, 44, 45, 46, 47, 48, 49	10K ¼W	330-4010	19
R3	18K 5% ¼W	330-4019	1
R4	22K 5% ¼W	330-4023	1
R5, 18, 24, 34, 37	39K ¼W	330-3039	5
R6, 19, 25, 35, 38	47Ω ¼W	330-1049	5
R7, 20, 26, 36, 39	4.7K ¼W	330-3047	5
R12	47K 5% ¼W	330-4045	1
R14	33K 5% ¼W	330-4034	1
R15, 16, 21, 22, 27, 50	1K ¼W	330-3010	6
R28, 29, 30, 31, 32, 40	2.2K ¼W	330-3022	6
C1	47PF CER	300-1047	1
C2	3.3 MF TANT	300-4016	1
C3, 16, 17, 18, 19, 25, 50	560PF CER	300-1560	7
C4, 12	.01MF CER	300-1703	2
C5, 6, 7, 8, 9, 13, 14, 15, 20, 22, 24, 27, 28, 29, 30, 31, 32, 33, 34	470PF CER	300-1470	19
C10	5.6MF TANT	300-4017	1
C11, 21, 23, 26	820PF CER	300-1820	4
C35, 49	10MF 16V	300-3006	2
C36, 37, 38, 39, 40, 41, 42, 43, 44, 45, 46, 47, 48	.05MF CER	300-1700	13
D1	DIODE GER.	300-0000	1
D2, 3, 4, 5, 6, 7, 8, 9, 10	DIODE SIL	300-1001	9

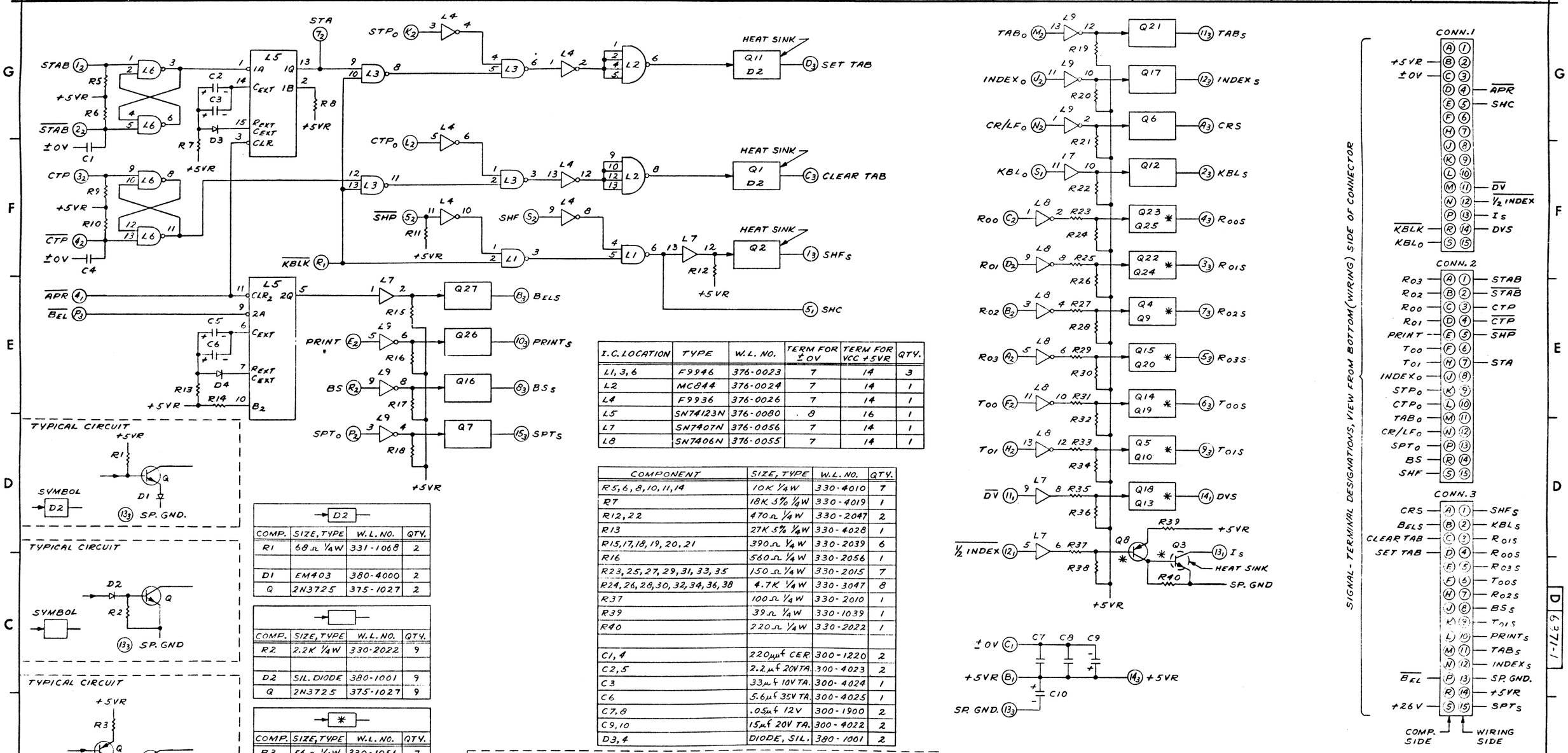

I.C. LOCATION	TYPE	W.L. NO.	TERM FOR ±0V	TERM FOR VCC +5VR	QTY.
L1, 3, 6	F9946	376-0023	7	14	3
L2	MC844	376-0024	7	14	1
L4	F9936	376-0026	7	14	1
L5	SN74123N	376-0080	8	16	1
L7	SN7407N	376-0056	7	14	1
L8	SN7406N	376-0055	7	14	1

COMPONENT	SIZE, TYPE	W.L. NO.	QTY.
R5, 6, 8, 10, 11, 14	10K 1/4W	330-4010	7
R7	18K 5% 1/4W	330-4019	1
R12, 22	470Ω 1/4W	330-2047	2
R13	27K 5% 1/4W	330-4028	1
R15, 17, 18, 19, 20, 21	390Ω 1/4W	330-2039	6
R16	560Ω 1/4W	330-2056	1
R23, 25, 27, 29, 31, 33, 35	150Ω 1/4W	330-2015	7
R24, 26, 28, 30, 32, 34, 36, 38	4.7K 1/4W	330-3047	8
R37	100Ω 1/4W	330-2010	1
R39	39Ω 1/4W	330-1039	1
R40	220Ω 1/4W	330-2022	1
C1, 4	220μf CER	300-1220	2
C2, 5	2.2μf 20V TA.	300-4023	2
C3	33μf 10V TA.	300-4024	1
C6	5.6μf 35V TA.	300-4025	1
C7, 8	.05μf 12V	300-1900	2
C9, 10	15μf 20V TA.	300-4022	2
D3, 4	DIODE, SIL.	380-1001	2

COMP.	SIZE, TYPE	W.L. NO.	QTY.
R1	68Ω 1/4W	331-1068	2
D1	EM403	380-4000	2
Q	2N3725	375-1027	2

COMP.	SIZE, TYPE	W.L. NO.	QTY.
R2	2.2K 1/4W	330-2022	9
D2	SIL. DIODE	380-1001	9
Q	2N3725	375-1027	9

COMP.	SIZE, TYPE	W.L. NO.	QTY.
R3	56Ω 1/4W	330-1056	7
R4	220Ω 1/4W	330-2022	7
Q	SIL. GT544	375-1011	7
QQ	2N6103 NPN	375-1035	16

COMPONENT LAYOUT 6371

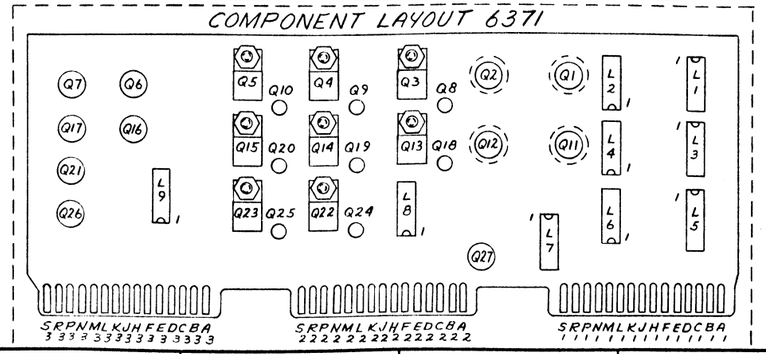

WANG LABORATORIES INC. TEWKSBURY, MASS.					
MODEL NO. 1200	DRAWN F.S.S.	6-31-73	APP.		7/14/73
	CHECKED		APP.		
TITLE SCHEMATIC LOGIBLOC #6371 TELETYPEWRITER OUTPUT DRIVER					
SHT 1 OF 1	DWG. NO. D 6371-1				REV

REVISION	DATE	BY

THIS DOCUMENT IS THE PROPERTY OF WANG LABORATORIES, INC. AND SHALL NOT BE REPRODUCED OR COPIED, OR USED AS A BASIS FOR THE MANUFACTURE OR SALE OF APPARATUS OR DEVICES WITHOUT PERMISSION.

DO NOT SCALE

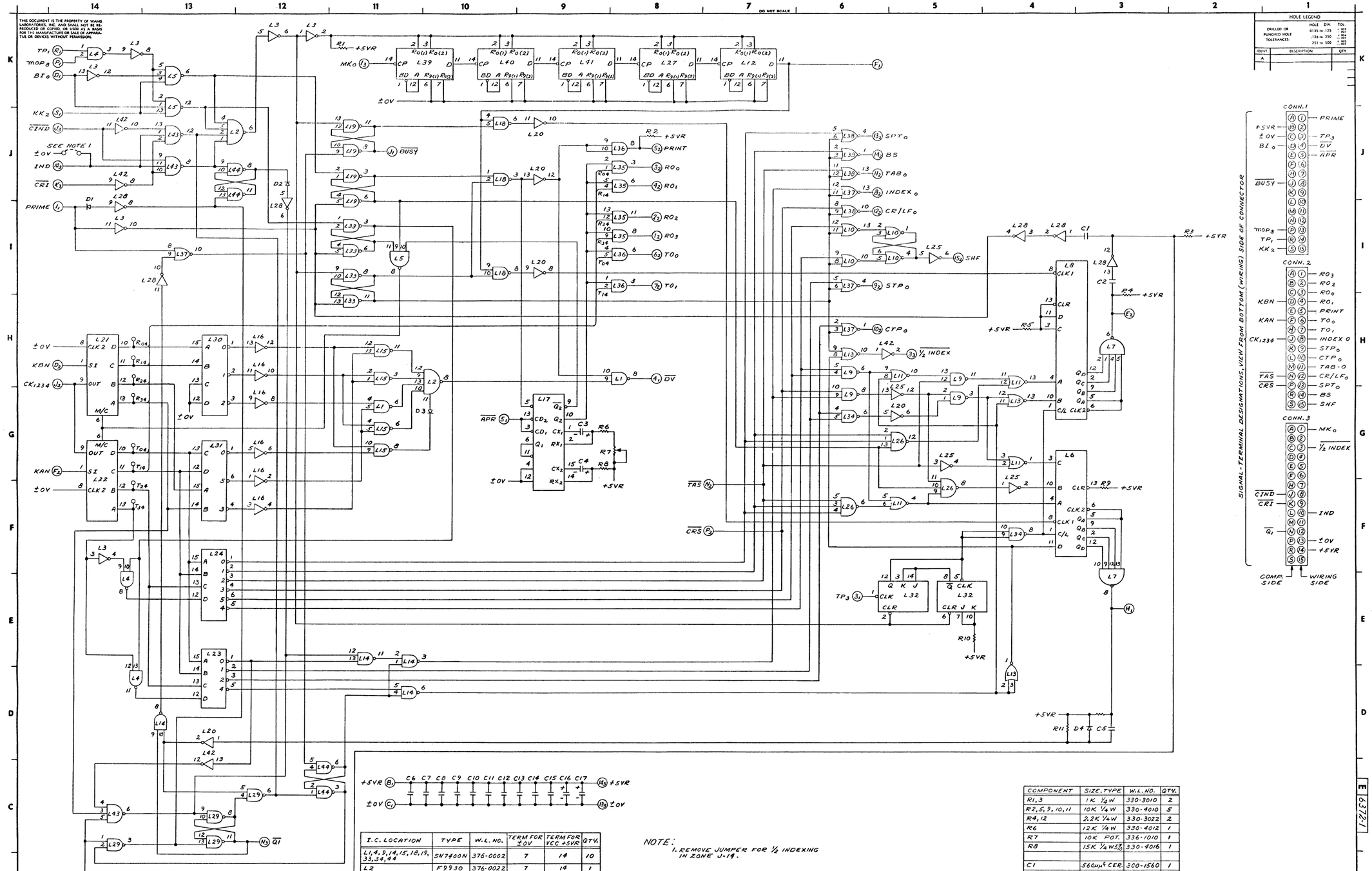

HOLE LEGEND			
DRILLED OR PUNCHED HOLE TOLERANCES:	HOLE DIA	TOL	
	.0135 to .125	±.003 ±.001	
	.126 to .250	±.004 ±.001	
	.251 to .500	±.005 ±.001	

IDENT.	DESCRIPTION	QTY.
A		

I.C. LOCATION	TYPE	W.L. NO.	TERM FOR ±0V	TERM FOR VCC +5VR	QTY.
L1,4,9,14,15,18,19,33,34,44	SN7400N	376-0002	7	14	10
L2	F9930	376-0022	7	14	1
L3	F9936	376-0026	7	14	1
L5,26	SN7410N	376-0003	7	14	2
L6,8	SN74197N	376-0053	7	14	2
L7	F9944	376-0024	7	14	1
L10,11,13,37,38	SN7402N	376-0016	7	14	5
L12,27,39,40,41	SN7490N	376-0073	10	5	5
L16,20,25,42	SN7404N	376-0010	7	14	4
L17	F9602	376-0104	8	16	1
L21,22	SN7495N	376-0059	7	14	2
L23,24,30,31	SN7442N	376-0008	8	16	4
L28	F9935	376-0025	7	14	1
L29	F9946	376-0023	7	14	1
L32	SN7473N	376-0005	11	4	1
L35,36	SN7409N	376-0035	7	14	2
L43	F9963	376-0033	7	14	1

NOTE:
1. REMOVE JUMPER FOR ½ INDEXING IN ZONE J-14.

COMPONENT	SIZE, TYPE	W.L. NO.	QTY.
R1,3	1K ¼W	330-3010	2
R2,5,9,10,11	10K ¼W	330-4010	5
R4,12	2.2K ¼W	330-3022	2
R6	12K ¼W	330-4012	1
R7	10K POT.	336-1010	1
R8	15K ¼W 5%	330-4016	1
C1	560μμf CER.	300-1560	1
C2,5	.0033μf 100V	300-2033	2
C3	2.2μf 20V TA.	300-4014	1
C4	5.6μf 35V TA.	300-4017	1
C6,7,8,9,10,11,12,13,14,15	.02μf 25V	300-1904	10
C16,17	15μf 20V	300-4022	2
D1,2,3,4	30V SIL.	380-1001	4

COMPONENT LAYOUT 6372

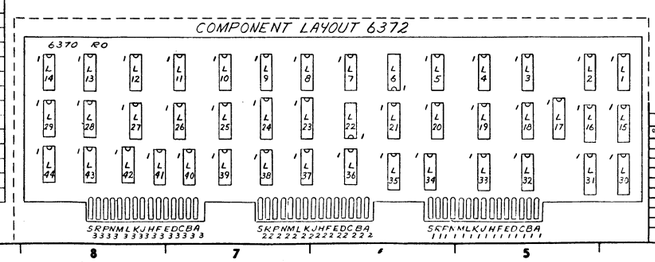

WANG PART NO	ITEM	QTY	NAME
QTY. TOT.	FIRST USED ON	ASSY USED ON	

WANG LABORATORIES, INC. TEWKSBURY, MASS. U.S.A.

MATERIAL

MODEL NO. 1200

SEE ENGRG SPECIFICATIONS

FINISH

TOL. EX. AS NOTED
XX ± .010 FRAC ± 1/64
XXX ± .005 ANG ± 1°30' FINISH 63

SCALE | SHT 1 OF 1

MATERIAL		DESCRIPTION	
BY	DATE	APPROVED BY	DATE
DWN F.S.S.	5-10-72	E ENGR.	7/1/72
CHK		M ENGR	
T C CONTROL		MFG ENGR	

TITLE SCHEMATIC LOGIBLOC #6372 TELETYPEWRITER OUTPUT CONTROL

WANG PART NUMBER | SIZE E | DRAWING NUMBER 6372-1 | REV.

REVISION

E 6372-1

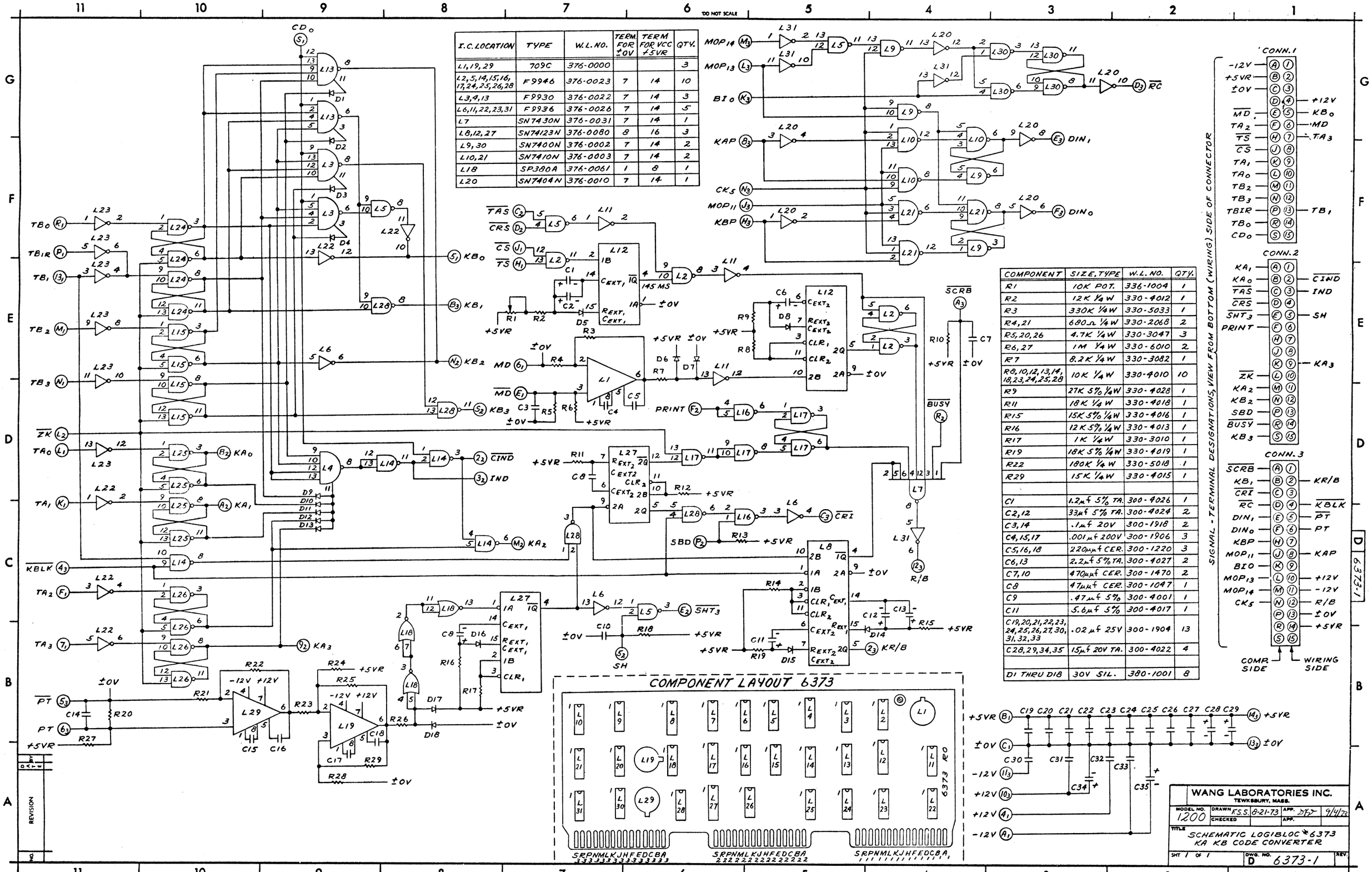

I.C. LOCATION	TYPE	W.L. NO.	TERM. FOR ±0V	TERM FOR VCC +5VR	QTY.
L1,19,29	709C	376-0000			3
L2,5,14,15,16, 17,24,25,26,28	F9946	376-0023	7	14	10
L3,4,13	F9930	376-0022	7	14	3
L6,11,22,23,31	F9936	376-0026	7	14	5
L7	SN7430N	376-0031	7	14	1
L8,12,27	SN74123N	376-0080	8	16	3
L9,30	SN7400N	376-0002	7	14	2
L10,21	SN7410N	376-0003	7	14	2
L18	SP380A	376-0061	1	8	1
L20	SN7404N	376-0010	7	14	1

COMPONENT	SIZE, TYPE	W.L. NO.	QTY.
R1	10K POT.	336-1004	1
R2	12K ¼W	330-4012	1
R3	330K ¼W	330-5033	1
R4,21	680Ω ¼W	330-2068	2
R5,20,26	4.7K ¼W	330-3047	3
R6,27	1M ¼W	330-6010	2
R7	8.2K ¼W	330-3082	1
R8,10,12,13,14, 18,23,24,25,28	10K ¼W	330-4010	10
R9	27K 5% ¼W	330-4028	1
R11	18K ¼W	330-4018	1
R15	15K 5% ¼W	330-4016	1
R16	12K 5% ¼W	330-4013	1
R17	1K ¼W	330-3010	1
R19	18K 5% ¼W	330-4019	1
R22	180K ¼W	330-5018	1
R29	15K ¼W	330-4015	1
C1	1.2μf 5% TA.	300-4026	1
C2,12	33μf 5% TA.	300-4024	2
C3,14	.1μf 20V	300-1918	2
C4,15,17	.001μf 200V	300-1906	3
C5,16,18	220μμf CER.	300-1220	3
C6,13	2.2μf 5% TA.	300-4027	2
C7,10	470μμf CER.	300-1470	2
C8	47μμf CER.	300-1047	1
C9	.47μf 5%	300-4001	1
C11	5.6μf 5%	300-4017	1
C19,20,21,22,23, 24,25,26,27,30, 31,32,33	.02μf 25V	300-1904	13
C28,29,34,35	15μf 20V TA.	300-4022	4
D1 THRU D18	30V SIL.	380-1001	8

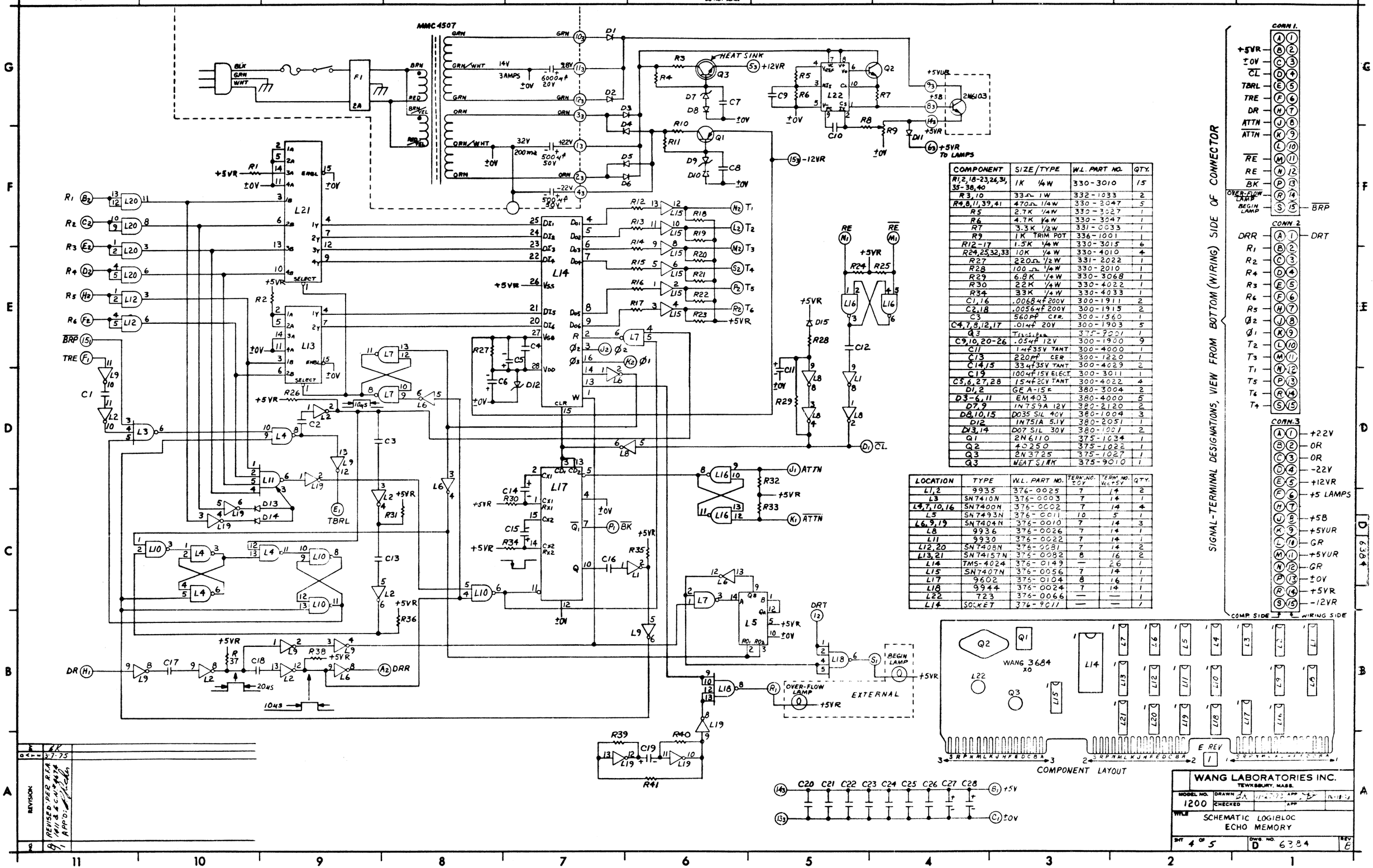

COMPONENT	SIZE/TYPE	W.L. PART NO.	QTY.
R1,2,18-23,26,31, 35-38,40	1K 1/4W	330-3010	15
R3,10	33Ω 1W	332-1033	2
R4,8,11,39,41	470Ω 1/4W	330-2047	5
R5	2.7K 1/4W	330-3027	1
R6	4.7K 1/4W	330-3047	1
R7	3.3K 1/2W	331-0033	1
R9	1K TRIM POT	336-1001	1
R12-17	1.5K 1/4W	330-3015	6
R24,25,32,33	10K 1/4W	330-4010	4
R27	220Ω 1/2W	331-2022	1
R28	100Ω 1/4W	330-2010	1
R29	6.8K 1/4W	330-3068	1
R30	22K 1/4W	330-4022	1
R34	33K 1/4W	330-4033	1
C1,16	.0068μf 200V	300-1911	2
C2,18	.00564μf 200V	300-1915	2
C3	560pf CER.	300-1560	1
C4,7,8,12,17	.01μf 20V	300-1903	5
Q3	Transistor	375-7001	1
C9,10,20-26	.05μf 12V	300-1900	9
C11	1μf 35V TANT	300-4000	1
C13	220pf CER	300-1220	1
C14,15	33μf 35V TANT	300-4029	2
C19	100μf 15V ELECT.	300-3011	1
C5,6,27,28	15μf 20V TANT	300-4022	4
D1,2	GE A-15E	380-3004	2
D3-6,11	EM403	380-4000	5
D7,9	IN759A 12V	380-2120	2
D8,10,15	D035 SIL 40V	380-1004	3
D12	IN751A 5.1V	380-2051	1
D13,14	D07 SIL 30V	380-1001	2
Q1	2N6110	375-1034	1
Q2	40250	375-1022	1
Q3	2N3725	375-1027	1
Q3	HEAT SINK	375-9010	1

LOCATION	TYPE	W.L. PART NO.	TERM. NO. ±0V	TERM. NO. Vcc+5V	QTY.
L1,2	9935	376-0025	7	14	2
L3	SN7410N	376-0003	7	14	1
L4,7,10,16	SN7400N	376-0002	7	14	4
L5	SN7493N	376-0011	10	5	1
L6,9,19	SN7404N	376-0010	7	14	3
L8	9936	376-0026	7	14	1
L11	9930	376-0022	7	14	1
L12,20	SN7408N	376-0081	7	14	2
L13,21	SN74157N	376-0082	8	16	2
L14	TMS-4024	376-0149	—	26	1
L15	SN7407N	376-0056	7	14	1
L17	9602	376-0104	8	16	1
L18	9944	376-0024	7	14	1
L22	723	376-0066	—	—	1
L14	SOCKET	376-9011	—	—	1

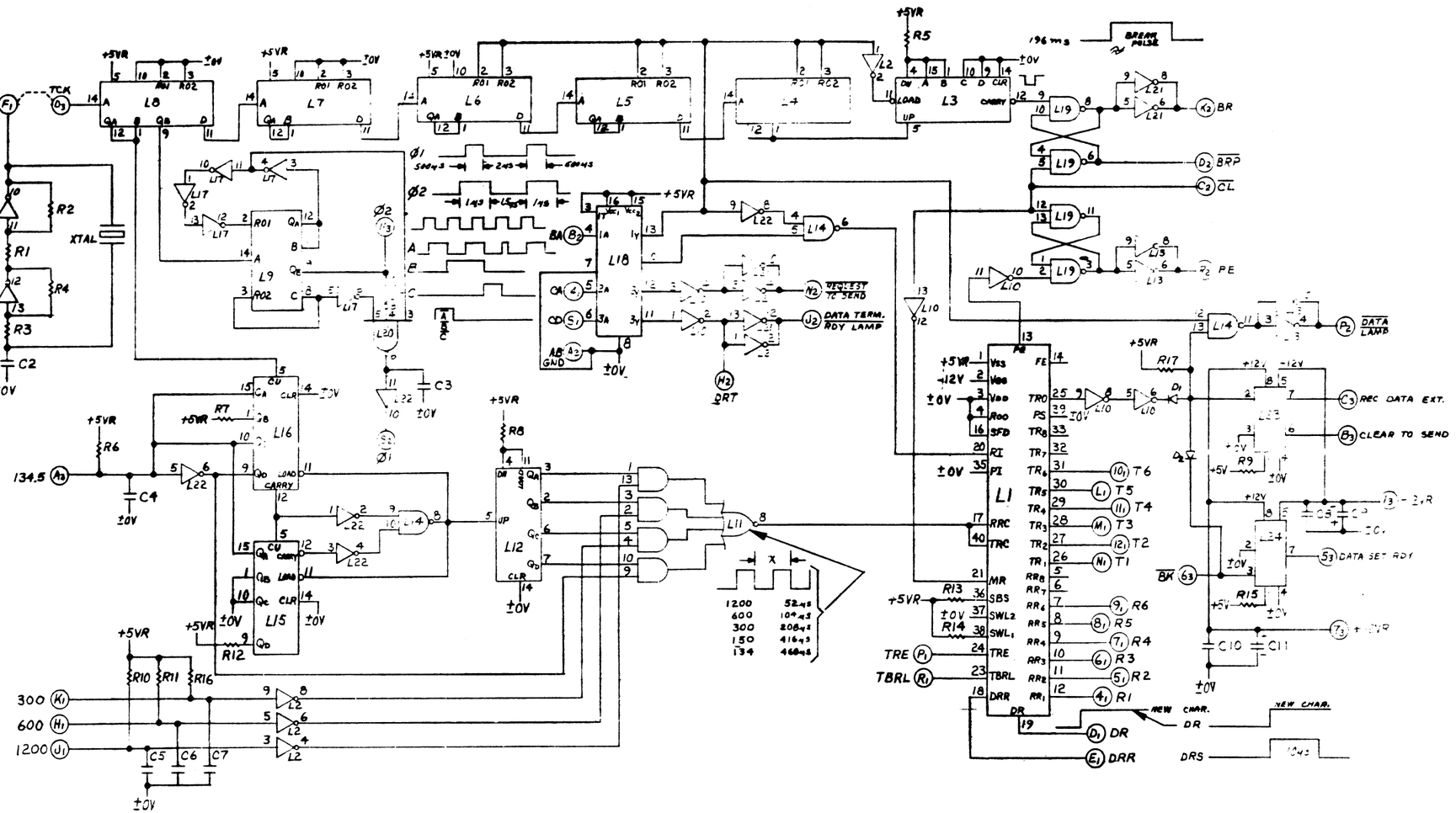

LOCATION	TYPE	W.L. PART NO.	TERM. NO. ±0V	TERM. NO. Vcc+5V	QTY.
L1	TR1402A	377-0071	3	1	1
L2,10,17,22	SN7404N	376-0010	7	14	4
L3,12,15,16	SN7493N	376-0053	8	16	4
L4-9	SN7493N	376-0011	10	5	6
L11	SN7453N	376-0057	7	14	1
L13,21	SN7406N	376-0055	7	14	2
L14,19	SN7400N	376-0002	7	14	2
L18	SN75154N	376-0077	8	15/16	1
L20	SN7410N	376-0003	7	14	1
L23,24	SN75150P	376-0076	4	8/5	2

COMPONENT	SIZE/TYPE	W.L. PART NO.	QTY.
R1,3	220Ω ¼W	330-2022	2
R2	1.8K ¼W	330-3018	1
R4	180Ω ¼W	330-2018	1
R5,7-9,12-15	1K ¼W	330-3010	8
R6,10,11,16	4.7K ¼W	330-3047	4
C2	47pf CER	300-1047	1
C3	150pf CER.	300-1150	1
C4-8,10	.01μf 25V CER	300-1903	6
C9,11,19,20	15μf 20V TANT	300-4022	4
C12-18	.05μf 12V CER	300-1900	7
XTAL	8MC, .05% BLILEY	321-0009	1
D1,2	DIODE GER.	380-0000	2
R17	10K ¼W	330-4010	1

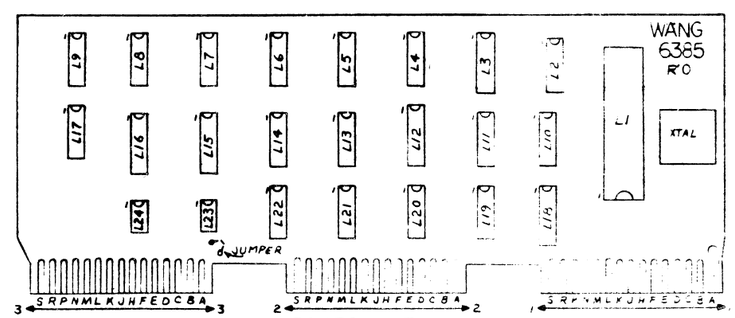

COMPONENT LAYOUT

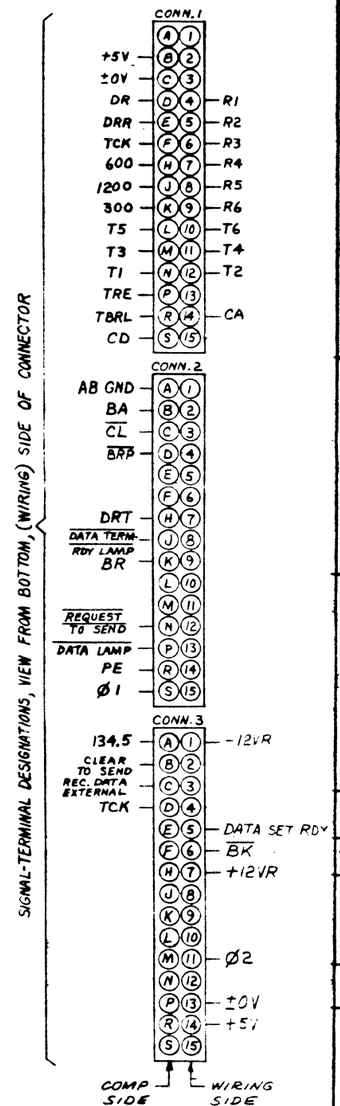

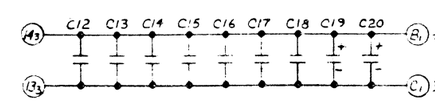

E-REV 1

REV	BY	DATE	REVISION
0	AK	3-10-75	
1			REVISED PER ECN-4615 PER MARKED-UP PRINT. APP'D:

WANG LABORATORIES INC.
TEWKSBURY, MASS.

MODEL NO. TESTER 1200 | DRAWN | CHECKED | APP

TITLE: SCHEMATIC LOGIBLOC FOR ECHO TRANSMIT AND RECEIVE

SHT 4 OF 6 | Dwg. NO. D 6385 | REV

THIS DOCUMENT IS THE PROPERTY OF WANG LABORATORIES, INC. AND SHALL NOT BE REPRODUCED OR COPIED OR USED AS A BASIS FOR THE MANUFACTURE OR SALE OF APPARATUS OR DEVICES WITHOUT PERMISSION.

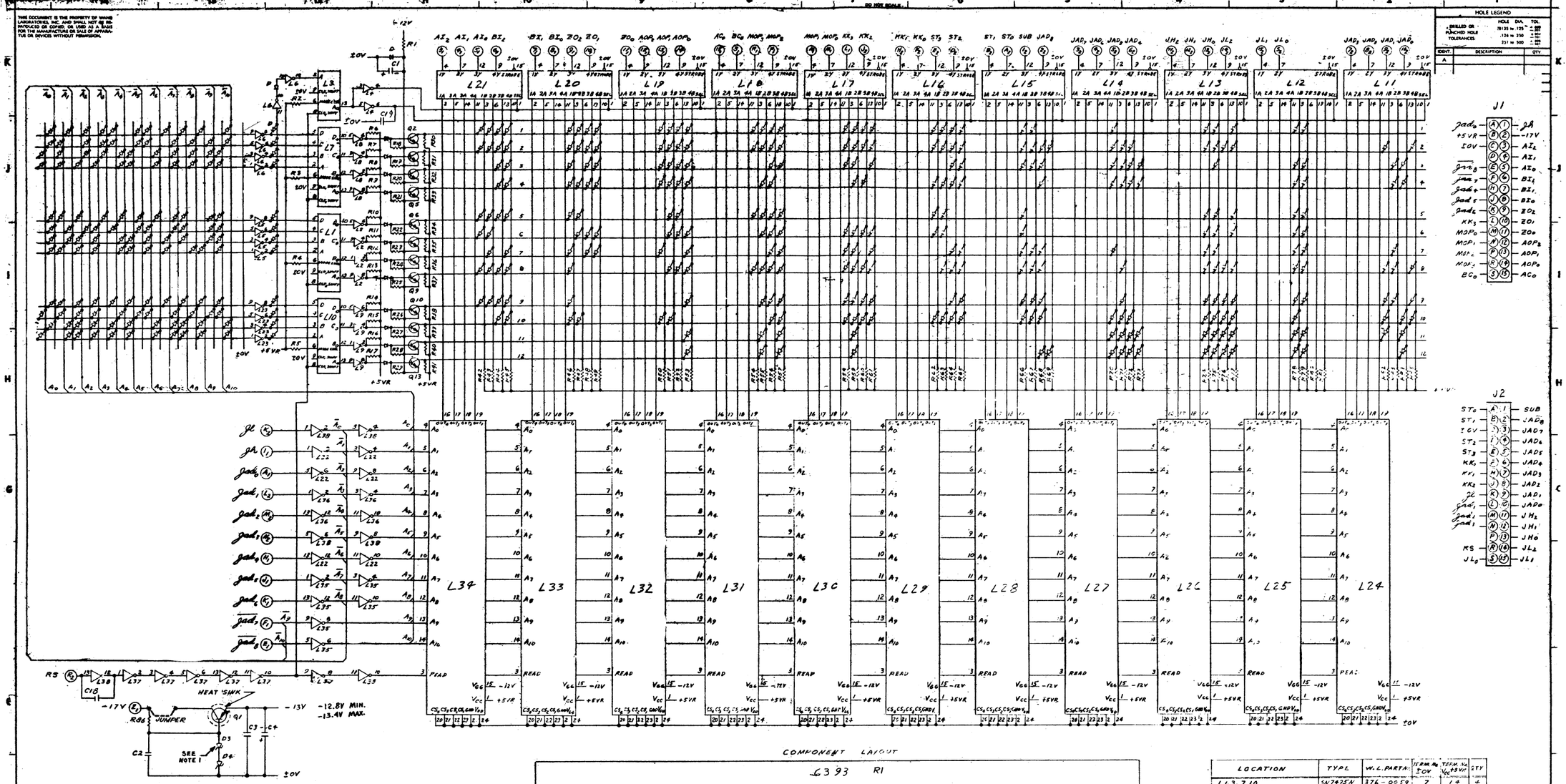

NOTES:

1. ADJUST THE D3 DIODE FOR AN OUTPUT OF -12.8V, MIN. TO -13.4V MAX. ON -13V BUSS LINE.

COMPONENT	SIZE/TYPE	W.L. PART NO	QTY
R1	120Ω 2W	337-2012	1
R2,3,4,5,18 THRU 23	1K ¼W	330-3010	16
R6 THRU 17	2.2K ¼W	330-3022	12
R30 THRU 41	4.7K ¼W	330-3047	12
R43 THRU 85	10K ¼W	330-4010	84
R86	120Ω ½W	331-2012	1
C18	47μμf CER	300-1047	1
C1	.33μf 35V TANT	300-4039	1
C2	10μf 25V ELECT	300-3033	1
C3	.02μf CER	300-1904	1
C4	10μf 35V TANT	300-4032	1
C5, 6, 17	15μf 20V TANT	300-4022	3
C7,8,9,10,11,12,13,14,15,16	.05μf CER	300-1900	10.
C19	390μμf CER	300-1390	1
D	DIODE SIL	380-1001	471
D3	1N753A 6.2V	380-2062	1
D4	1N759A 6.8V	380-2068	1
Q1	2N6296	375-1029	1
Q2 THRU 13	2N3014	375-0017	12
J1, J2	CINCH JONES CONN.	350-4118	2

COMPONENT LAYOUT

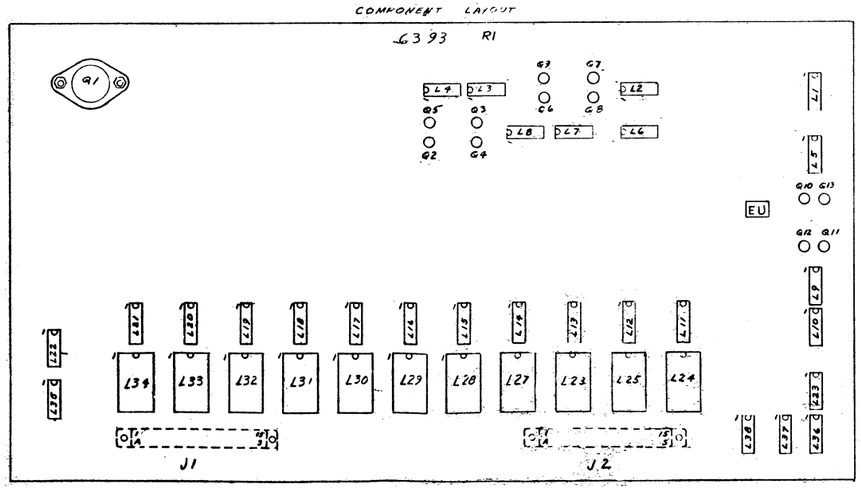

LOCATION	TYPE	W.L. PART #	V_{CC} ±5V	V_{GG} ±5V	QTY
L1, 3, 7, 10	SN7425N	376-0059	7	14	4
L2, 8, 9	SN7406N	376-0055	7	14	3
L4, 22, 35, 36, 37, 38	SN7404N	376-0010	7	14	6
L5, 6, 23	9935	376-0025	7	14	3
L11, 12, 13, 14, 15, 16, 17, 18, 19, 20, 21	SN74157N	376-0052	8	16	11
L24 THRU L34	24 PIN SKT	376-9003			11

LOCATION	W.L. NO.	VENDOR NO.	W.L. NO.	VENDOR NO.
L24	377-0114	CM5990N	377-0217	CM8300N
L25	377-0116	CM6010N	377-0218	CM8311N
L26	377-0115	CM6000N	377-0219	CM8320N
L27	377-0113	CM5980N	377-0216	CM8290N
L28	377-0112	CM5370N	377-0215	CM8280N
L29	377-0111	CM5960N	377-0214	CM8270N
L30	377-0110	CM5950N	377-0213	CM8260N
L31	377-0109	CM5940N	377-0212	CM8250N
L32	377-0108	CM5930N	377-0211	CM8240N
L33	377-0107	CM5920N	377-0210	CM8230N
L34	377-0106	CM5910N	377-0209	CM8220N
P.C. BOARD LABELING	US		EU	

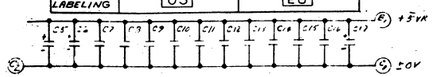

B-REV.
1

REV							
	N.F. 4/8/74	N.F. 4-9-74	E.K. 6-3-74	E.K. 6-18-74	J.C. 6-20-74	D.A. 8-21-74	K.W. 1-7-75
	REVISED PER ECN#1104 APPD.	REVISED PER RFA #0346 APPD.	REVISED PER RFA-1014 APPD.	REVISED PER DCR-0078 APPD.	REVISED PER RFA-1014 APPD.	REVISED PER DCR-0073 APPD.	REVISED PER ECN#1351 APPD.
	1	2	3	4	5	6	7

WANG PART NO	ITEM	QTY	NAME	MATERIAL	DESCRIPTION
FIRST USED ON	ASSY USED ON				

WANG LABORATORIES, INC. TEWKSBURY MASS. U.S.A.

	BY	DATE	APPROVED BY	DATE
DWN			E ENGR	
CHK			M ENGR	
E C CONTROL			MFG ENGR	

MATERIAL

MODEL NO 1222

SEE ENGRG SPECIFICATIONS No.

FINISH

TOL EX AS NOTED
XX ± .010 FRAC ± 1/64
XXX ± .005 ANG ± 1°30' FINISH

TITLE SCHEMATIC LOGIBLOC 6393 SOLID STATE R.O.M. WITH 12 WORD MODIFICATION

SCALE	SHT	OF	WANG PART NUMBER	SIZE	DRAWING NUMBER	REV
			210-6393	E	6393	8

THIS DOCUMENT IS THE PROPERTY OF WANG LABORATORIES, INC. AND SHALL NOT BE REPRODUCED OR COPIED, OR USED AS A BASIS FOR THE MANUFACTURE OR SALE OF APPARATUS OR DEVICES WITHOUT PERMISSION.

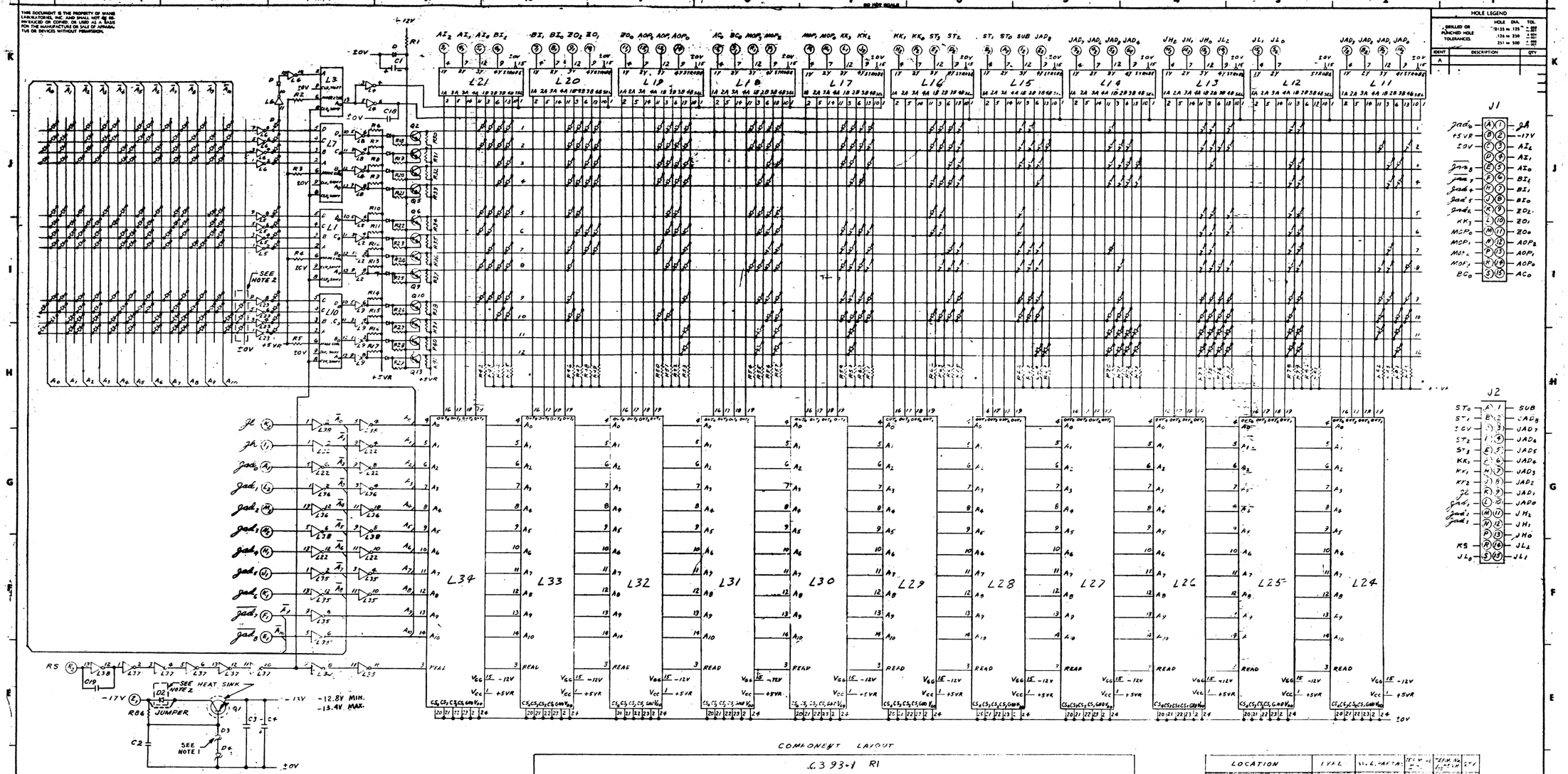

HOLE LEGEND		
DRILLED OR PUNCHED HOLE TOLERANCES.	HOLE DIA.	TOL.
	.0135 to .125	±.001
	.126 to .250	±.001
	.251 to .500	±.001
	.501 to .750	±.001
	.751 to .1.000	±.001

IDENT	DESCRIPTION	QTY
A		

COMPONENT LAYOUT

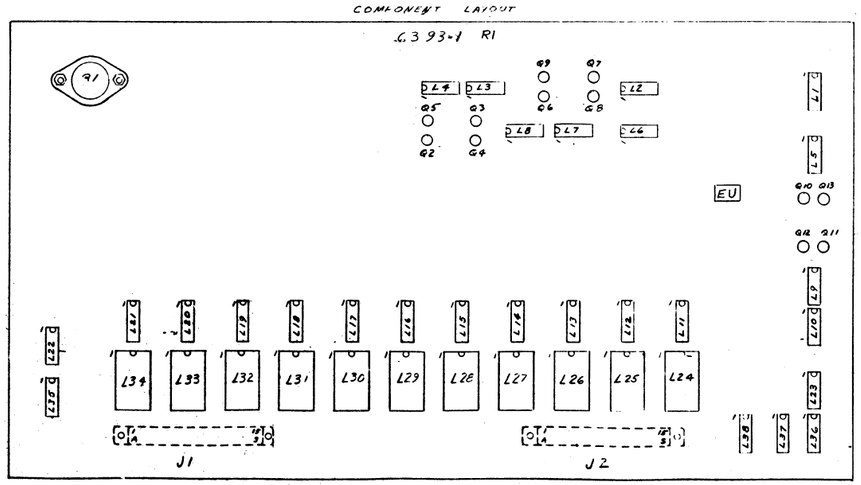

NOTES:

1. ADJUST THE D3 DIODE FOR AN OUTPUT OF -12.8V, MIN. TO -13.4V MAX. ON -13V BUSS LINE.
2. FOR 1200 WITH ½ INDEX ADD FOUR DIODES AS NOTED. THE ½ INDEX BOARD WILL BE MADE IN FINAL ASSEMBLY.

COMPONENT	SIZE/TYPE	W.L. PART NO.	QTY
R1	120Ω 2W	337-2012	1
R2,3,4,5,18 THRU 29	1K ¼W	330-3010	16
R6 THRU 17	2.2K ¼W	330-3022	12
R30 THRU 41	4.7K ¼W	330-3047	12
R42 THRU 85	10K ¼W	330-4010	44
R86	120Ω ½W	331-2012	1
C19	47mμf CER	300-1047	1
C1	.33μf 35V TANT	300-4039	1
C2	100μf 25V ELECT	300-3038	1
C3	.02μf CER	300-1904	1
C4	10μf 35V TANT	300-4032	1
C5,6,17	15μf 20V TANT	300-4022	3
C7,8,9,10,11,12,13,14,15,16	.05μf CER	300-1900	10
C18	390μμf CER	300-1390	1
D	DIODE SIL	380-1001	474
D2	RM403	380-4000	1
D3	1N753A 6.2V	380-2062	1
D4	1N759A 6.8V	380-2068	1
Q1	2N6296	375-1029	1
Q2 THRU 13	2N3014	375-0017	12
J1,2	CINCH JONES COMM	350-4118	2

LOCATION	TYPE	W.L. PART NO.	TOTAL NO. PER BOARD	TOTAL NO. PER SYSTEM	QTY
L1,3,7,10	SN74195N	376-0059	7	14	4
L2,8,9	SN7406N	376-0055	7	14	3
L4,22-35,36,37,38	SN7404N	376-0010	7	14	6
L5,6,23	9935	376-0025	7	14	3
L11,12,13,14,15,16,17,18,19,20,21	SN74157N	376-0082	8	16	11
L2 & THRU L34	24 PIN SKT	376-9003			11

LOCATION	W.L. NO.	VENDOR NO.	W.L. NO.	VENDOR NO.
L24	377-0114	CM5990N	377-0217	CM8300N
L25	377-0116	CM6010N	377-0218	CM8310N
L26	377-0115	CM6000N	377-0219	CM8320N
L27	377-0113	CM5980N	377-0216	CM8290N
L28	377-0112	CM5970N	377-0215	CM8280N
L29	377-0111	CM5960N	377-0214	CM8270N
L30	377-0110	CM5950N	377-0213	CM8260N
L31	377-0109	CM5940N	377-0212	CM8250N
L32	377-0108	CM5930N	377-0211	CM8240N
L33	377-0107	CM5920N	377-0210	CM8230N
L34	377-0106	CM5910N	377-0209	CM8220N
P.C. BOARD LABELING	US		EU	

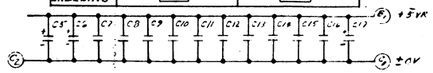

E-REV 1

REV									
E	M.F. 4/18/74	M.F. 2-7-74	J.L. 1-3-74	J.K. 6-18-74	J.R.C. 6-20-74	D.D.R.			
D	REVISED PER E.C.N. #106 APPD: JRC								
C		REVISED PER ECN #1-76 APPD: JRC	REVISED PER RVA-1014 APPD: JRC	REVISED PER DCR-0C78 APPD: JRC	REVISED PER RVA-1014 APPD: JRC				
B						REVISED PER ECN #1-1373 APPD: JRC	REVISED PER ECN #1-1373 APPD: JRC	REVISED PER ECN #1-1373 APPD: JRC	REVISED PER ECN #1-1373 APPD: JRC

WANG PART NO	ITEM	QTY	NAME	MATERIAL	DESCRIPTION
SYM. FIRST USED ON	ASSY USED ON				

WANG LABORATORIES, INC. TEWKSBURY MASS. U.S.A.

MATERIAL

FINISH

MODEL NO. 1200 ½ INDEX

SEE ENGRG SPECIFICATIONS No.

TOL. EX. AS NOTED .XX ± .010 FRAC ± 1/16 .XXX ± .005 ANG. ± 1°30' FINISH 125

SCALE SHT OF

BY	DATE	APPROVED BY	DATE
DWN		E ENGR	
CHK		M ENGR	
E C CONTROL		MFG ENGR	

TITLE SCHEMATIC LOGIC DIG. 6393-1 SOLID STATE R.O.M. WITH 12 WORD MODIFICATION

210-6393-1 | E | 6393-1 | 8

WANG PART NUMBER | SIZE | DRAWING NUMBER | REV.

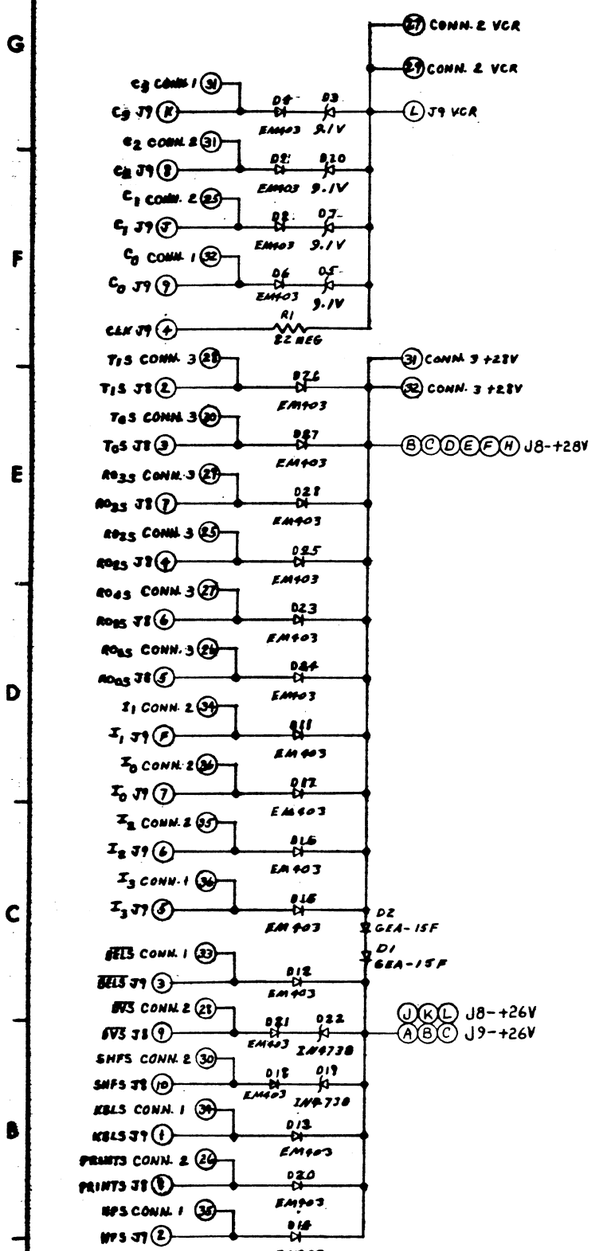

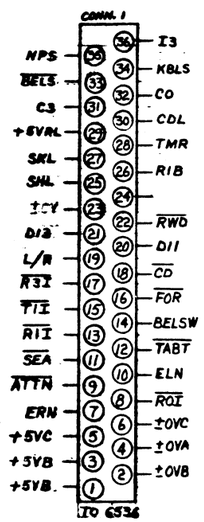

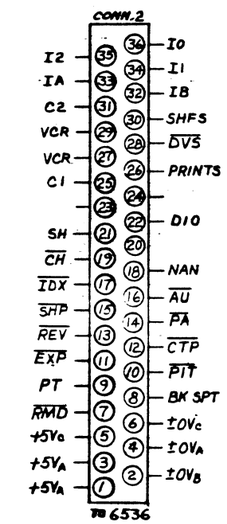

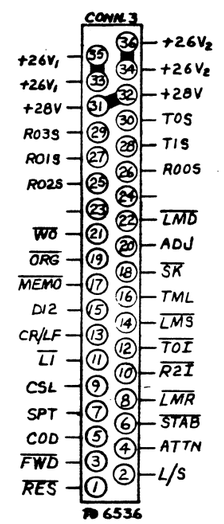

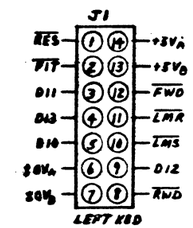

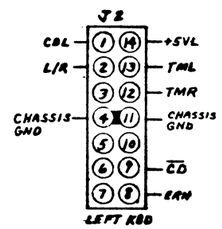

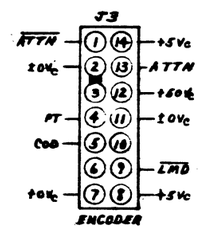

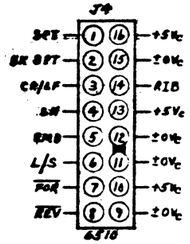

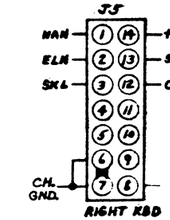

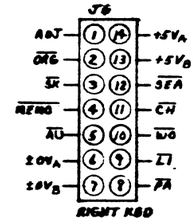

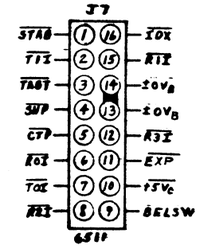

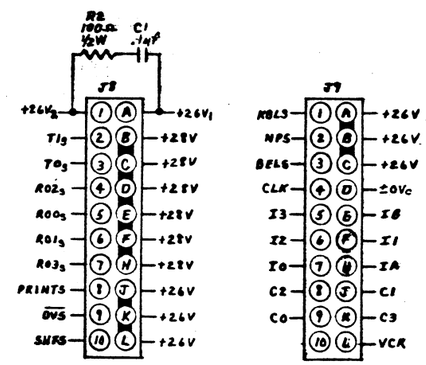

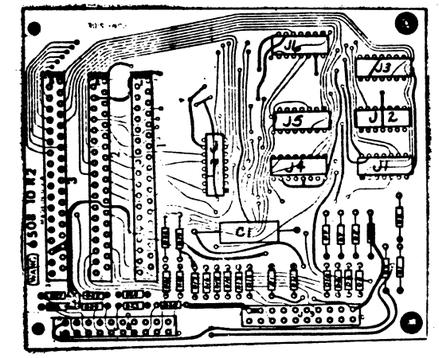

	4					
	1	510-6508		6508 PC BOARD		1
						2
	2	380-2082 1		IN4738 8.2V 1W ZENER D		3
	4	1 -2091-3		9.1V 5W ZENER D		4
	2	1 -3004		GEA-15F RECTIFIER		5
	20	380-4003		EM403 RECTIFIER HI-VOLT.		6
						7
	2	376-9005		16 PIN SOCKET CAMBION		8
	5	376-9012		14 PIN SOCKET CAMBION		9
						10
	2	350-0028		225-21021-110 PC CONN		11
	3	350-0401B		36 PIN FLAT CABLE CONN B		12
						13
	1	300-2310		.1 μf 400V MYLAR C		14
	1	331-2010		100 Ω ½W 10% RES.		15
	1	330-6082		8.2 M Ω ½W 10% RES.		16
	X		D6508-1	SCHEMATIC		17
				6508-4		18
				510-6508 2-21		

REV.	BY	DATE	APP'D
0	A.F.	5-13-74	7-22-74	EBO 11-22-74
1/10		REV. PER RFA-0928 DCR 8E(5), WA0064 APP'D	
2/10		REVISED PER DCR 8103 APP'D	
9/12		REVISED PER RFA 9220 APP'D	

E. REV. 0

WANG LABORATORIES INC.
TEWKSBURY, MASS.

MODEL NO. 1222	DRAWN A.F. 3/25/74	APP.	6-6-74
	CHECKED	APP.	

TITLE SCHEMATIC LOGIBLOC #6508
CABLE JUNCTION BOARD

SHT 4 OF 5 | SIZE D | DWG. NO. D 6508-1 | REV. 3

D 6508-1

DO NOT SCALE

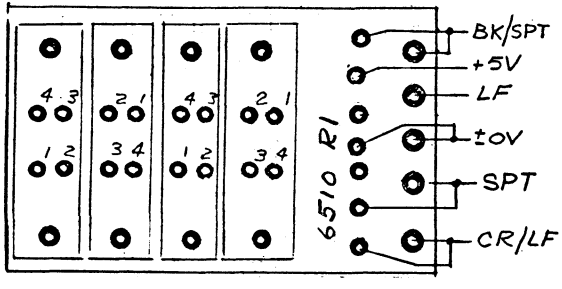

COMPONENT LAYOUT

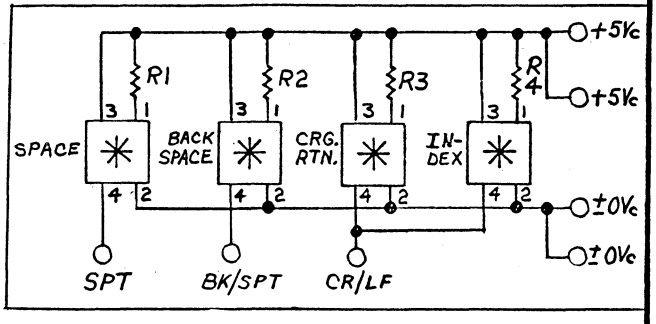

COMPONENT	SIZE/TYPE	W.L. PART NO.	QTY.
R1, 2, 3, 4	120Ω 1/4W	330-2012	4
H13.B1	PHOTO TSTR	375-2103	4

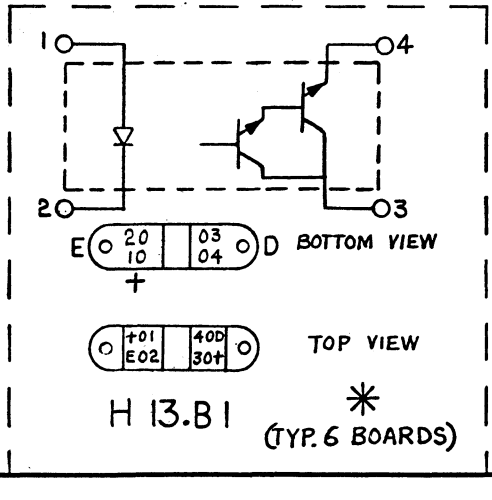

EBA 9-27-74	REVISED PER ECN #4322 APP'D:
2/1	
EBA 8-27-74	REVISED PER RFA #1102 APP'D:
1/0	

E. REV. 1

WANG LABORATORIES, INC.
TEWKSBURY, MASS. U. S. A.

MODEL NO.	DRAWN		APPD	
1222	CK	12-10-73	DP	5-21-74
	CHECKED		APPD	

TITLE SCHEMATIC LOGIBLOC 6510 SPECIAL FUNCTION BOARD

W.O. NO.	SCALE	DWG. NO.	REV
		A 6510-1	2

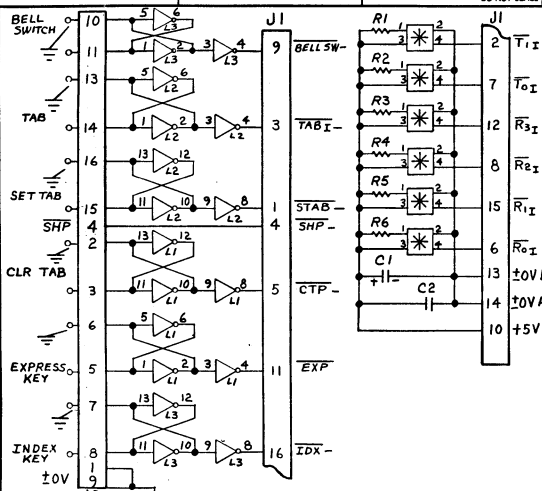

LOCATION	TYPE	W.L. PART NO.	TERM. No ±0V	TERM. No Vcc+5V	QTY
L1,2,3	9936	376-0026	7	14	3
J1,J2	16 PIN SOCKET	376-9005 CAP-16/10W			2

COMPONENT	SIZE/TYPE	W.L. PART NO.	QTY.
R1 – 6	120Ω 1/4 W	330-2012	6
C1	15μf 20V TANT	300-4022	1
C2	.01μf 12V CER	300-1903	1
PHOTO CELL TSTR	H 13.B1	375-2103	6

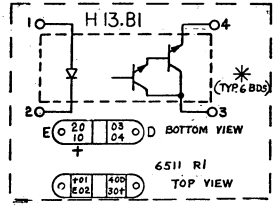

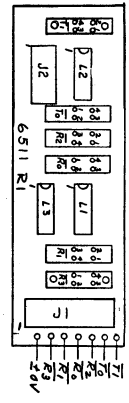

E.REV. 1

REVISION	BY	DATE
CHANGED PER RA 0963 APP'D: [illegible]	BK	5-28-74
REVISED: PER RA 0963 APP'D: [illegible]	F.S.S.	5-10-74
REVISED PER RA 0322 APP'D: [illegible]	EGM	8-26-74

WANG PART NO.	ITEM	QTY	NAME
Qty. Per Unit	FIRST USED ON	ASSY USED ON	

WANG LABORATORIES, INC. TEWKSBURY, MASS. U.S.A.

MATERIAL

FINISH

MODEL NO. 1222

SEE ENGRG SPECIFICATIONS No.

TOL. EX. AS NOTED .XX ± .010 FRAC. ± 1/64 .XXX ± .005 ANG. ± 1°30' FINISH 125

SCALE SHT OF

MATERIAL	DESCRIPTION			
BY		DATE	APPROVED BY	DATE
DWN	BK	1-4-74	E ENGR	5-29-74
CHK			M ENGR	
E. C. CONTROL			MFG ENGR	

TITLE SCHEMATIC LOGIBLOC #6511 CODE BOARD

210-6511	B	6511-1	3
WANG PART NUMBER	SIZE	DRAWING NUMBER	REV

DO NOT SCALE

NO.	REVISION	DATE	BY
1/0	REVISED PER RFA 0975. APP'D	5-20-74	M.F.
2/0	REVISED PER RFA #1101 APP'D	8-26-74	EBA
3/1	REVISED PER ECN #4322 APP'D	8-26-74	EBA

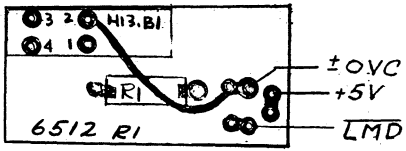

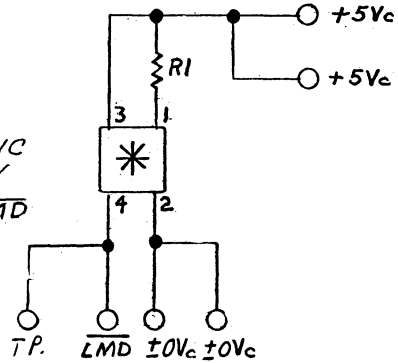

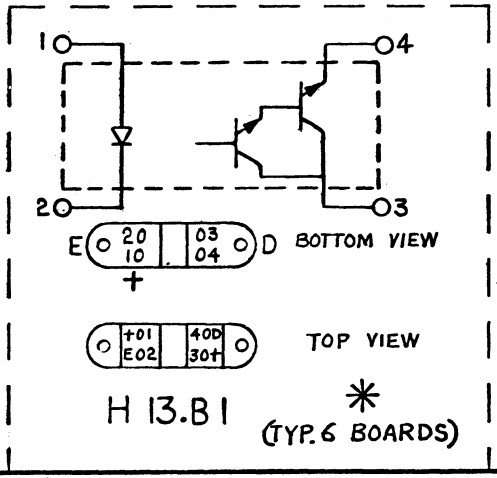

COMPONENT	SIZE/TYPE	W.L. PART NO.	QTY.
R1	120Ω 1/4W	330-2012	1
H13.B1	PHOTO TSTR	375-2103	1

E.REV. 1

WANG LABORATORIES, INC.
TEWKSBURY, MASS. U. S. A.

MODEL NO.	DRAWN	12-10-73	APPD	5-21-74
1222	CHECKED		APPD	

TITLE SCHEMATIC LOGIBLOC # 6512 HOME POSITION

W.O. NO.	SCALE	DWG. NO.	REV
		A 6512-1	3

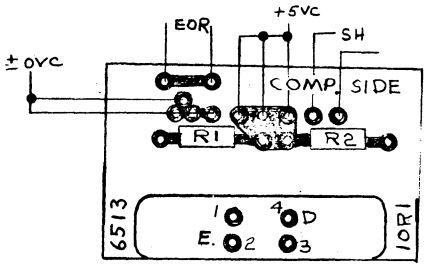

COMPONENT LAYOUT

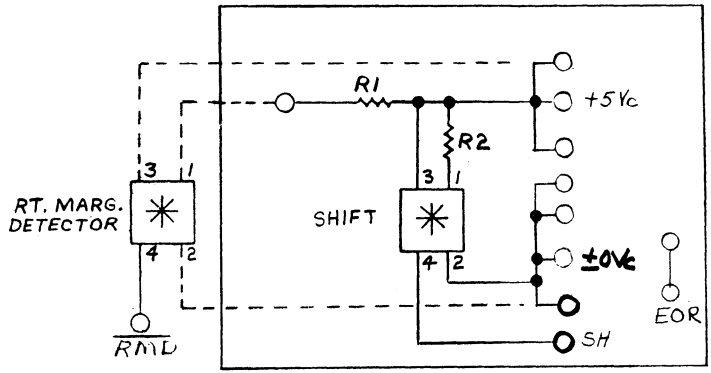

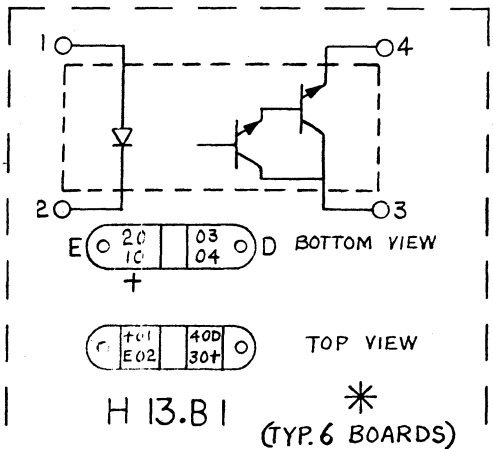

COMPONENT	SIZE/TYPE	W.L. PART NO.	QTY.
R1, R2	120Ω 1/4W	33[illegible]-2012	2
H13.B1	PHOTO TSTR.	375-2103	1

E.REV.
1

RA		
1-24-75		
R. 2 / 1	REVISED PER ECN # 45761	R. Ruban
EBA		
9-4-74		
1/1	REVISED PER ECN # 43572 APPD: JPW	

WANG LABORATORIES, INC.
TEWKSBURY, MASS. U. S. A.

MODEL NO.	DRAWN		APPD	
1222	CHECKED		APPD	

TITLE SCHEMATIC LOGIBLOC #6513 SHIFT CIRCUIT

W.O. NO.	SCALE	DWG. NO.	REV
		A 6513	2

DO NOT SCALE

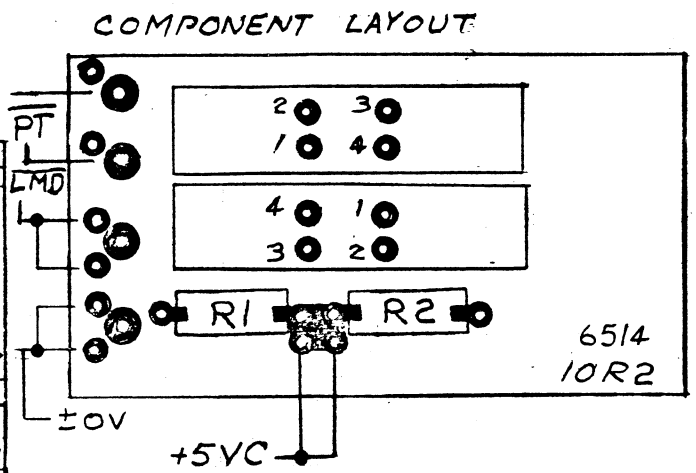

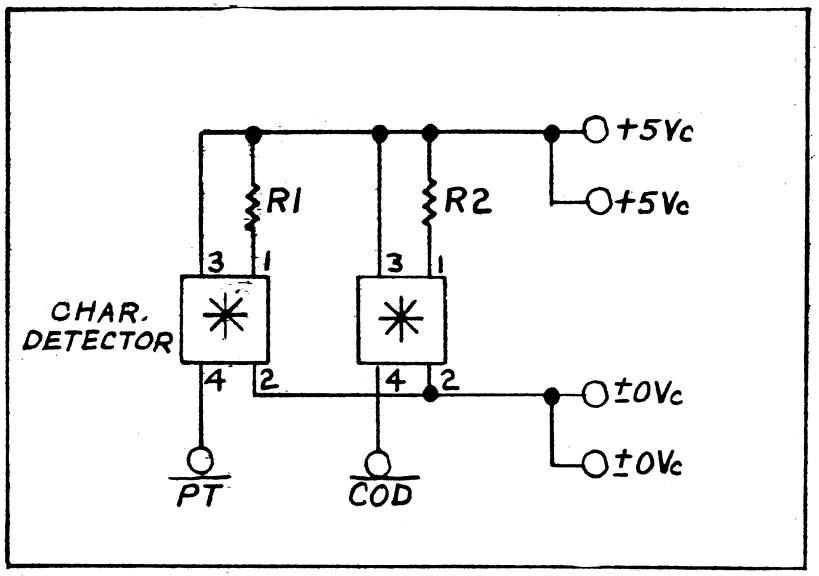

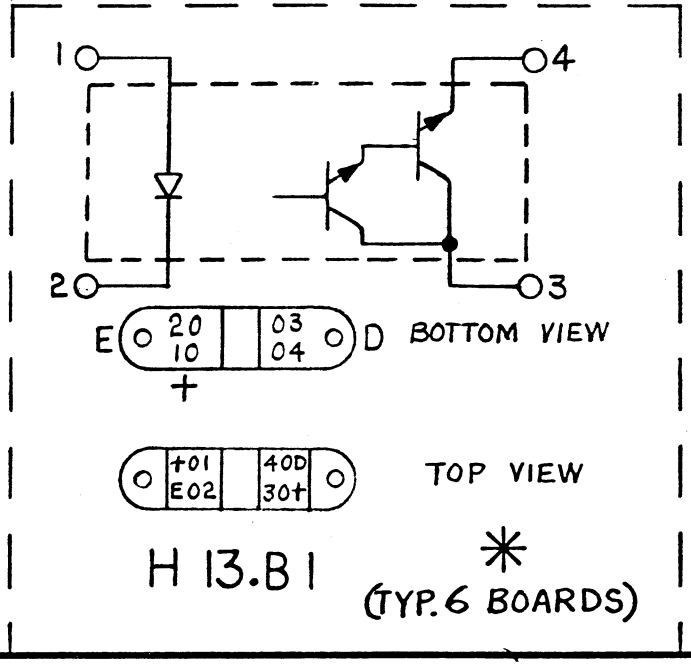

COMPONENT	SIZE/TYPE	W.L. PART NO.	QTY.
R1, R2	120Ω 1/4W	330-2012	2
H13.B1	PHOTO TSTR.	375-2103	2

JAN 31 1975

REV		
1/0	CHANGED PER RFA-0973	APP'D:
2/0	CHANGED PER RFA-1100	APP'D:
3/1	REVISED PER ECN 4322	APP'D
4/2	CHANGED PER RFA #1223	P. Brichan

RA	1-23-75
EBA	8-26-74
bK	8-20-74
bK	5-20-74

E.REV. 1

WANG LABORATORIES, INC.
TEWKSBURY, MASS. U. S. A.

MODEL NO.	DRAWN bK	12-7-73	APPD DJL	5-20-74
1222	CHECKED	1-21-75	APPD	

TITLE: SCHEMATIC LOGIBLOC # 6514 CHARACTER DETECTOR

W.O. NO.	SCALE	DWG. NO.	REV
		A 6514	4

DO NOT SCALE

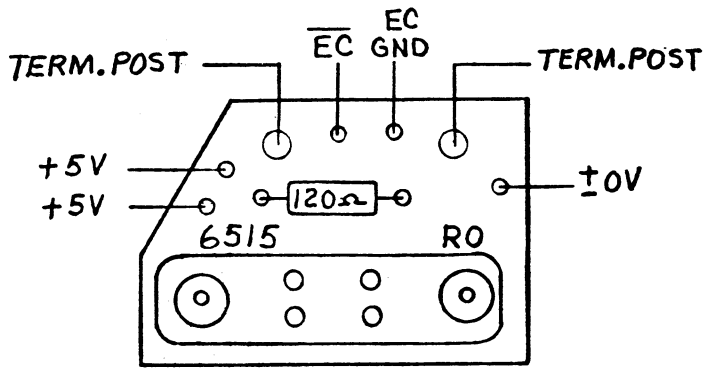

COMPONENT LAYOUT

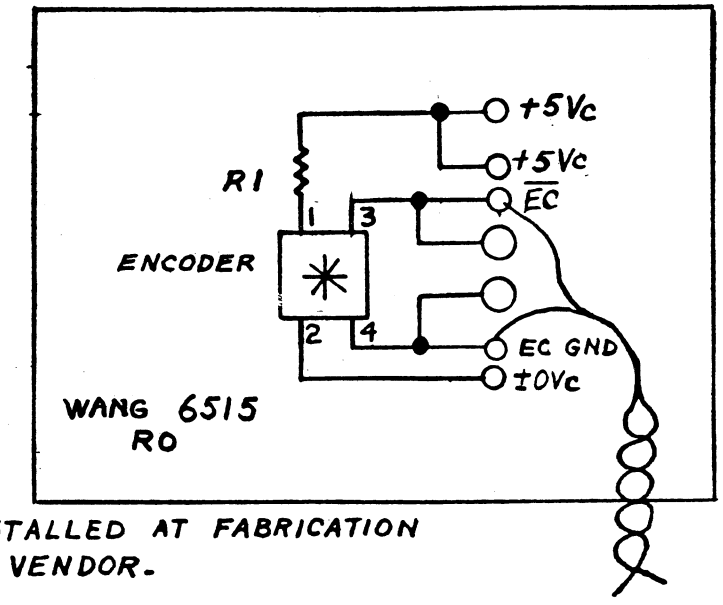

NOTE: INSTALLED AT FABRICATION BY VENDOR.

COMPONENT	SIZE/TYPE	W.L. PART NO.	QTY.
TERMINAL POST	CAMBION 1512-2	SEE NOTE	2
H13.B1	PHOTO TSTR.	375-2103-4	1
R1	120Ω 1/4W	330-2012	1

E.REV. 1

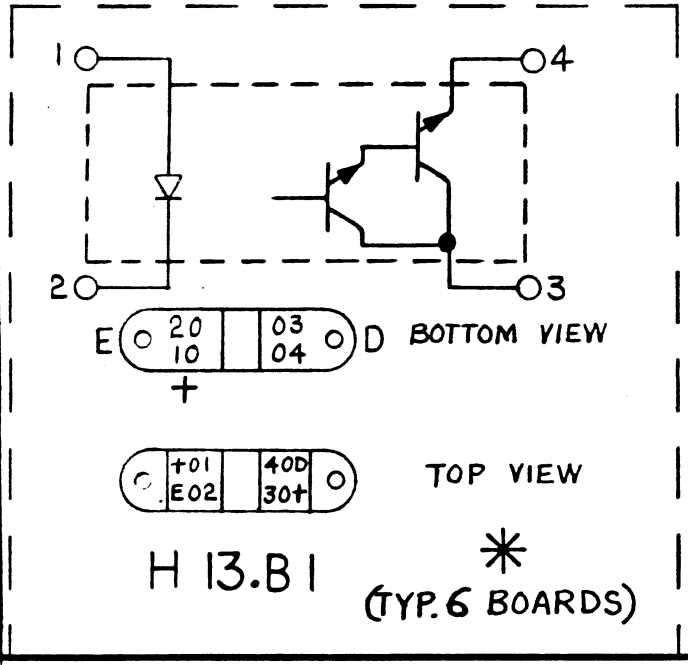

WLI # 210 - 6515

F.S.S.	
12-20-74	
REVISED: PER E.C.N. #4936 APP'D. P. Richer	
2/1	

GK	EBA
5-20-74	9-4-74
CHANGED PER RFA-0972 APP'D:	REVISED PER ECN-4351 APP'D:
0/0	1/1

WANG LABORATORIES, INC.
TEWKSBURY, MASS. U. S. A.

MODEL NO.	DRAWN		APPD	
1222	GK	12-7-73		5-24-74
	CHECKED	12-23-74	APPD	

TITLE: SCHEMATIC LOGIBLOC # 6515 ENCODER CIRCUIT

W.O. NO.	SCALE	DWG. NO.	REV
		A 6515	2

Sheet 4 of 5

THIS DOCUMENT IS THE PROPERTY OF WANG LABORATORIES, INC. AND SHALL NOT BE BE PRODUCED OR COPIED, OR USED AS A BASIS FOR THE MANUFACTURE OR SALE OF APPARATUS OR DEVICE WITHOUT PERMISSION.

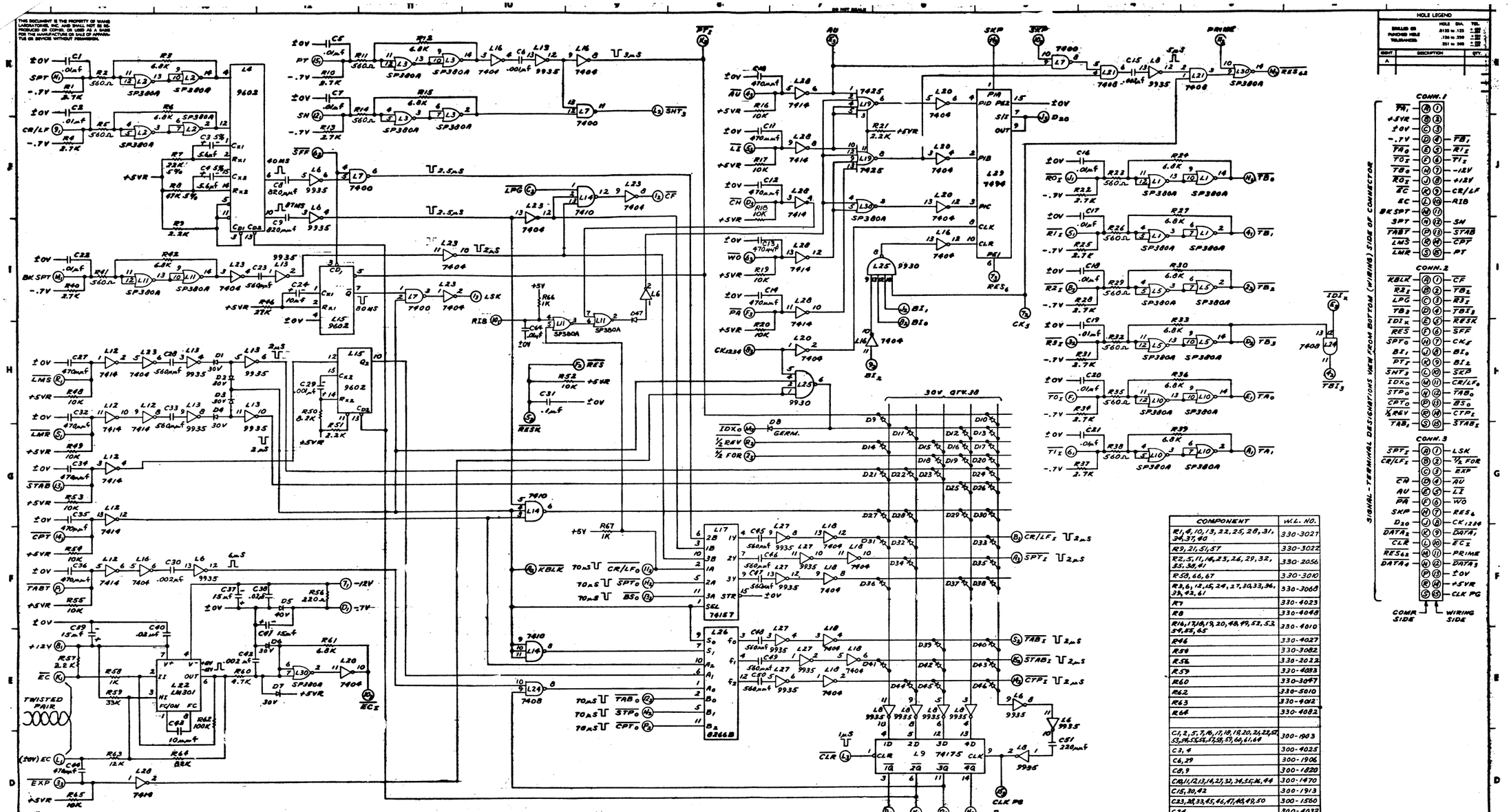

COMPONENT	W.L. NO.
R1,4,10,13,22,25,28,31,34,37,40	330-3027
R9,21,51,57	330-3022
R2,5,11,14,23,26,29,32,35,38,41	330-2056
R50,66,67	330-3010
R3,6,12,15,24,27,30,33,36,39,42,61	330-3068
R7	330-4023
R8	330-4049
R16,17,18,19,20,48,49,52,53,54,55,65	330-4010
R46	330-4027
R58	330-3082
R56	330-2022
R59	330-4093
R60	330-3047
R62	330-5010
R63	330-4012
R64	330-4082
C1,2,5,7,8,11,18,19,20,24,25,51,53,54,55,56,57,58,59,60,61,64	300-1903
C3,4	300-4025
C6,29	300-1906
C8,9	300-1820
C10,11,12,13,14,27,32,34,35,36,44	300-1470
C15,30,42	300-1913
C23,28,33,45,46,47,48,49,50	300-1560
C24	300-4032
C31	300-1901
C37,39,41,62,63	300-4022
C38,40	300-1904
C43	300-1010
C61	300-1820
D1,2,3,4,6,7,9-46	380-1001
D5,47	380-1004
D8	380-0086

I.C. LOCATION	TERM. FOR ±0V	TERM. FOR VCC +5VR	W.L. NO.
L1,2,3,5,10,11,30	1	8	376-0061
L4,15	8	16	376-0104
L6,8,13,27	7	14	376-0025
L7	7	14	376-0002
L9	8	16	376-0119
L12,28	7	14	376-0139
L14	7	14	376-0003
L16,18,20,23	7	14	376-0010
L17	8	16	376-0082
L19	8	16	376-0092
L21,26	7	14	376-0081
L22	PIN 4 -V	PIN 7 +V	376-0164
L25	7	14	376-0082
L26	8	16	376-0041
L29	12	5	376-0064

WANG PART NO	ITEM	QTY	NAME	MATERIAL	DESCRIPTION
			WANG LABORATORIES, INC. TEWKSBURY MASS. U.S.A.		

	BY	DATE	APPROVED BY	DATE
DWN	F.S.S.	4-25-76	E ENGR	
CHK			M ENGR	
E C CONTROL			MFG ENGR	

MODEL NO. 1222

TITLE: SCHEMATIC LOGIBLOC #6516 TYPEWRITER INPUT CIRCUIT

FINISH

TOL EX. AS NOTED

SCALE | SHT / OF /

WANG PART NUMBER | SIZE E | DRAWING NUMBER 6516-1 | REV. 3

REV.	DESCRIPTION	BY	DATE
A	CHANGED PER RFA 0910-10	F.S.S.	4-25-76
B	CHANGED PER RFA-0910-8	F.S.S.	4-25-76
C	CHANGED PER RFA-1021	F.S.S.	6-4-76
D	REVISED PER ECO 4135	F.S.S.	8-26-76
E	REVISED PER ECO 4445	F.S.S.	8-26-76

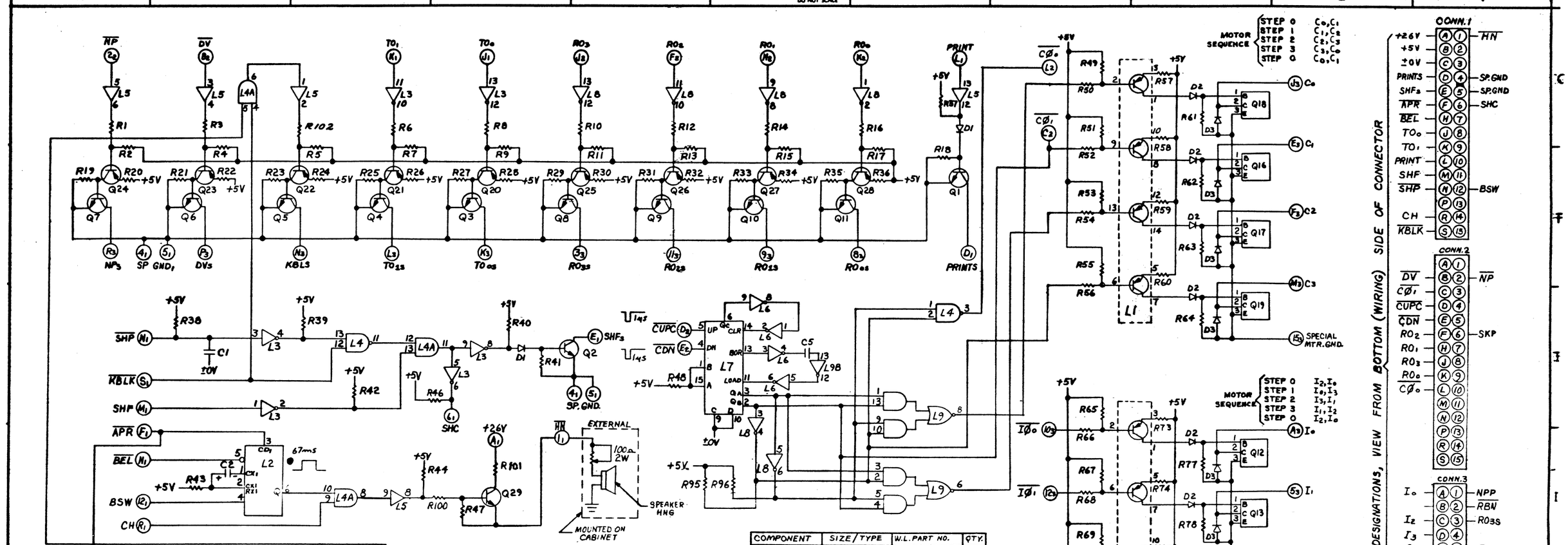

LOCATION	TYPE	W.L. P/N	TERM. NO. ±0V	TERM. NO. Vcc +5V	QTY.
L1,10	3468	376-0107			2
L2,9A	9602	376-0104	8	16	2
L3,8	SN7406N	376-0055	7	14	2
L4	SN7400N	376-0002	7	14	1
L4A	SN7408N	376-0081	7	14	1
L5	SN7407N	376-0056	7	14	1
L9B	9935	376-0025	7	14	1
L7	SN74193N	376-0053	8	16	1
L9	SN7451N	376-0012	7	14	1
L9C,6	9936	376-0026	7	14	2

COMPONENT	SIZE/TYPE	W.L. P/N	QTY.
Q1,2	2N3725	375-1027	2
Q3-15,29	2N6103	375-1035	14
Q20-28	GT544	375-1017	9
Q16-19	2N6099	375-1042	4
HEATSINK (Q2)	BIRTCHTER	375-9010	1
TRANSIPAD	LARGE	375-9001	2
TRANSIPAD	SMALL	375-9004	9
SCREW	6-32 x 5/8 NYLON	650-3205	2
NUT	6-32 NYLON	652-3002	2

COMPONENT	SIZE/TYPE	W.L. PART NO.	QTY.
R 50,52,54,56,66,68,70,72,100	100Ω 1/4W	330-2010	9
R2,4,7,9,11,13,15,17,49,51,53,55,65,67,69,71,5	4.7K 1/4W	330-3047	17
R1,3,6,8,10,12,14,16,44,102	150Ω 1/4W	330-2015	10
R40,	330Ω 1/4W	330-2033	1
R18,46	2.2K 1/4W	330-3022	2
R19,21,23,25,27,29,31,33,35,39,42,47,48,95,96,41	1K 1/4W	330-3010	16
R20,22,24,26,28,30,32,34,36	56Ω 1/4W	330-1056	9
R37	390Ω 1/4W	330-2039	1
R38	10K 1/4W	330-4010	1
R43	39K 1/4W	330-4039	1
R57-60,73-76	27Ω 1/2W	331-1027	8
R61-64,77-80,	220Ω 1/4W	330-2022	8
R101	100Ω 1W	332-2010	1
R97	22K 5% 1/4W	330-4023	1
C10	33μf 35V TANT	300-4029	1
C1,6,7	.05μf 12V	300-1900	3
C2	5.6μf 35V TANT	300-4017	1
C13,14,15	560pf CER	300-1560	3
C5	220pf CER	300-1220	1
C12	10μf 35V TANT	300-4032	1
D1	D035 SIL. 30V	380-1001	2
D2	D035 SIL. 40V	380-1004	8
D3	EM403	380-4000	8
R99	27K 1/4W	330-4027	1
C8,9	15μf 20V TANT.	300-4022	2

REV	BY	DATE	REVISION
0	BK	5-21-74	REVISED PER RPA-0958 APPD:
1/1	BK	7-22-74	REVISED PER ECN-4281 APPD:
2/2	F.S.S.	12-4-74	REVISED: PER E.C.N. APPD:
3/2	F.S.S.	12/20/74	REVISED: PER E.C.N. APPD:

E-REV. 2

WANG LABORATORIES INC.
TEWKSBURY, MASS.

MODEL NO. 1222 | DRAWN BK 12-20-73 | APP. | 5-22-74
CHECKED | 12-6-74 | APP.

TITLE: SCHEMATIC LOGIBLOC 6517 DRIVING CIRCUIT

SHT 4 OF 5 | DWG. NO. D 6517 | REV 3

THIS DOCUMENT IS THE PROPERTY OF WANG LABORATORIES, INC. AND SHALL NOT BE REPRODUCED OR COPIED, OR USED AS A BASIS FOR THE MANUFACTURE OR SALE OF APPARATUS OR DEVICES WITHOUT PERMISSION.

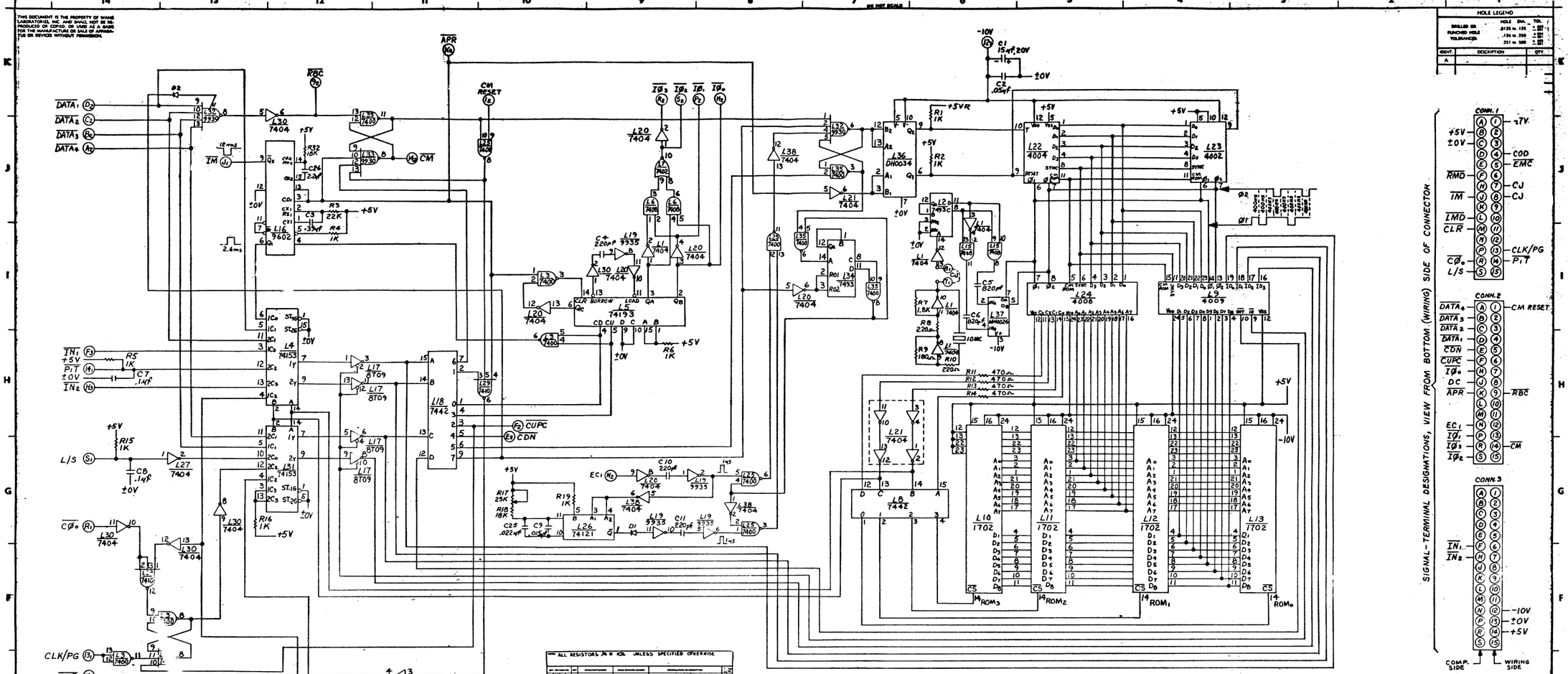

HOLE LEGEND

DRILLED OR PUNCHED HOLE TOLERANCES	HOLE DIA.	TOL.
	.0125 to .125	±.002
	.126 to .350	±.003
	.351 to .500	±.005

IDENT.	DESCRIPTION	QTY.
A		

ALL RESISTORS ¼ W 10% UNLESS SPECIFIED OTHERWISE

					LOCATION
	4		51Q-6518	6518 P.C. BOARD	
	4	377-0009		1702 PROG. ROM	L10-13
	1	-0205		4002-1 RAM IC	L23
	1	-0206		4004 CPU IC	L22
	1	-0207		4002 INTER IC	L23
	1	377-0208		4008 INTER IC	L24
	3	376-0002		7400 IC	L3,25,38
	1	-0003		7410	L33
	1	-0008		7442	L18,18
	6	-0010		7404	L1,20,27,30,38
	2	-0011		7493	L2,34
	1	-0016		7402	L7
	2	376-0022		9322 IC	L32,33
	1	376-0025		9335 IC	L19
	1	-0031		74121	L26
	1	-0033		74195	L5
	2	-0041		SP380A	L14,28
	1	-0078		8T09	L17
	2	-0081		9322	L6,15
	2	-0082		74153	L4,31
	1	-0104		9602	L16
	1	-0114		MC6026	L37
	1	376-0115		2-0034 IC	L36
	6	376-9003		24 PIN SOCKET	
	2	376-9002		16 PIN SOCKET	L22,23
	1	321-0008		10 MC OSCILLATOR	
	2	380-1002		1N35 SIL DIODE 30V	
	1	380-1004		1N35 SIL DIODE 40V	
					C4,10,11
	1	140			C16
	1	150			C26
	2	180			C15,21
	2	201			C10
	3	4-22			C1,25,24
	1	223			C9
	1	226			C23
	1	229			C22
	1	300-027			C26
	1	336-1007		25K TRIM POT	R17
	1	330-2018		180 Ω	R9
	2	-2022		220 Ω	R8,10
	4	-2047		470 Ω	R11,12,13,14
	8	-3001		1 K	R1,2,4-6,15,16,19
	1	-3028		1.8 K	R7
	3	-3068		6.8 K	R20,21,31
	2	-4068		8 K	R18,32
	1	330-4023		22 K	R3
	1	330-3027		2.7 K	R20,21,22
	3	330-8056		560 Ω	R24,25,27
	1		E 6518-1	SCHEMATIC	

LOCATION	TERM. NO. ±0V	TERM. NO. Vcc +5V
L1,20,21,27,30,38	7	14
L2,34	10	5
L3,25,35	7	14
L4,31	8	16
L5	8	16
L6,15	7	14
L7	7	14
L8,18	8	16
L9		
L10,11,12,13		12
L14,28	1	8
L16	8	16
L17	7	14
L19	7	14
L22	5	
L23	6	
L24		
L26	7	14
L29	7	14
L32,33	7	14
L36	7	14
L37	3	6
24 PIN SOCKET		

REV	REVISION	BY	DATE	CHK	DATE	APP	DATE
A	CHANGED PER REA-0881 APPD.		5-14-74		5-20-74		
B	CHANGED PER REA-0978 APPD.		7-26-74				
C	REVISED PER REA-0288		8-26-74				
D	REVISED PER REA-0315						
E	CHANGED R20-22 FROM 2.7K TO 6.8K. R24-27 FROM 1K TO 560Ω. APPD.						
F	REVISED PER REA-0334						
G	CHANGED R20-22 FROM 6.8K TO 2.7K. APPD.						
H	REVISED PER REA-0375						
J	REVISED PER REA-0376						
K	REVISED PER REA-0426 APPD.						

LOADING CHART FOR L10,11,12 & 13

					LOCATION
	1	378-0305-10		1702	L10
	1	378-0305-11		1702	L11
	1	378-0303		1702	L12
	1	378-0302		1702	L13

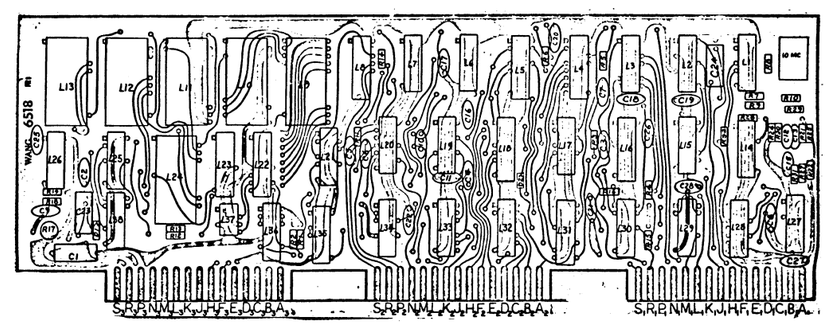

COMPONENT LAYOUT

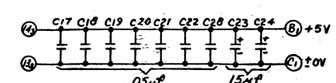

WANG PART NO	ITEM	QTY	NAME	MATERIAL	DESCRIPTION
FIRST USED ON / ASSY USED ON					

WANG LABORATORIES, INC. TEWKSBURY, MASS. U.S.A.

	BY	DATE	APPROVED BY	DATE
DWN		5-14-74	E ENGR.	
CHK		10-18-74	M ENGR	
E C CONTROL			MFG ENGR	

MATERIAL

MODEL NO 1222

SEE ENGRG SPECIFICATIONS No.

FINISH

TOL. EX. AS NOTED XX ± .010 FRAC ± 1/64 XXX ± .005 ANG. ± 1°30' FINISH 75

SCALE SHT OF

TITLE SCHEMATIC LOGIBLOC MICRO PROCESSOR

210-6518 | E | 6518-1 | 5

WANG PART NUMBER | SIZE | DRAWING NUMBER | REV

SHEET 1

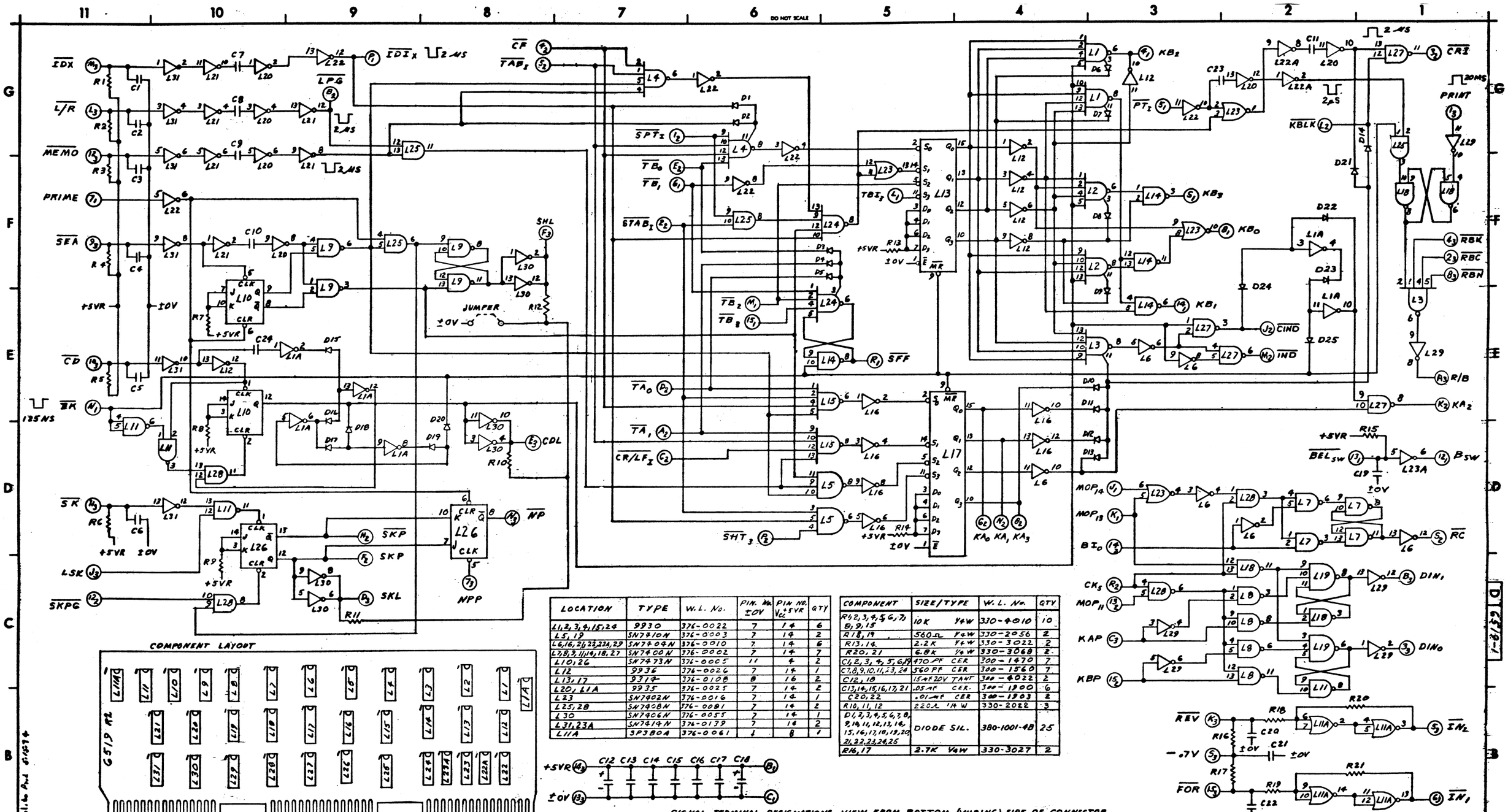

LOCATION	TYPE	W.L. No.	PIN No. ±0V	PIN No. V_{CC} +5VR	QTY
L1,2,3,4,15,24	9930	376-0022	7	14	6
L5, 19	SN7410N	376-0003	7	14	2
L6,16,20,23,22A,29	SN7404N	376-0010	7	14	6
L7,8,9,11,14,18,27	SN7400N	376-0002	7	14	7
L10,26	SN7473N	376-0005	11	4	2
L12	9936	376-0026	7	14	1
L13,17	9314	376-0108	8	16	2
L20, L1A	9935	376-0025	7	14	2
L23	SN7402N	376-0016	7	14	1
L25,28	SN7408N	376-0081	7	14	2
L30	SN7406N	376-0055	7	14	1
L31,23A	SN7419N	376-0139	7	14	2
L11A	SP380A	376-0061	1	8	1

COMPONENT	SIZE/TYPE	W.L. No.	QTY
R1,2,3,4,5,6,7, 8,9,15	10K ¼W	330-4010	10
R18,19	560Ω ¼W	330-2056	2
R13,14	2.2K ¼W	330-3022	2
R20,21	6.8K ¼W	330-3068	2
C1,2,3,4,5,6,19	470 PF CER	300-1470	7
C7,8,9,10,11,23,24	560 PF CER	300-1560	7
C12,18	15µF 20V TANT	300-4022	2
C13,14,15,16,17,21	.05µF CER.	300-1900	6
C20,22	.01µF CER	300-1803	2
R10,11,12	220Ω ¼W	330-2022	3
D1,2,3,4,5,6,7,8, 9,10,11,12,13,14, 15,16,17,18,19,20, 21,22,23,24,25	DIODE SIL.	380-1001-48	25
R16,17	2.7K ¼W	330-3027	2

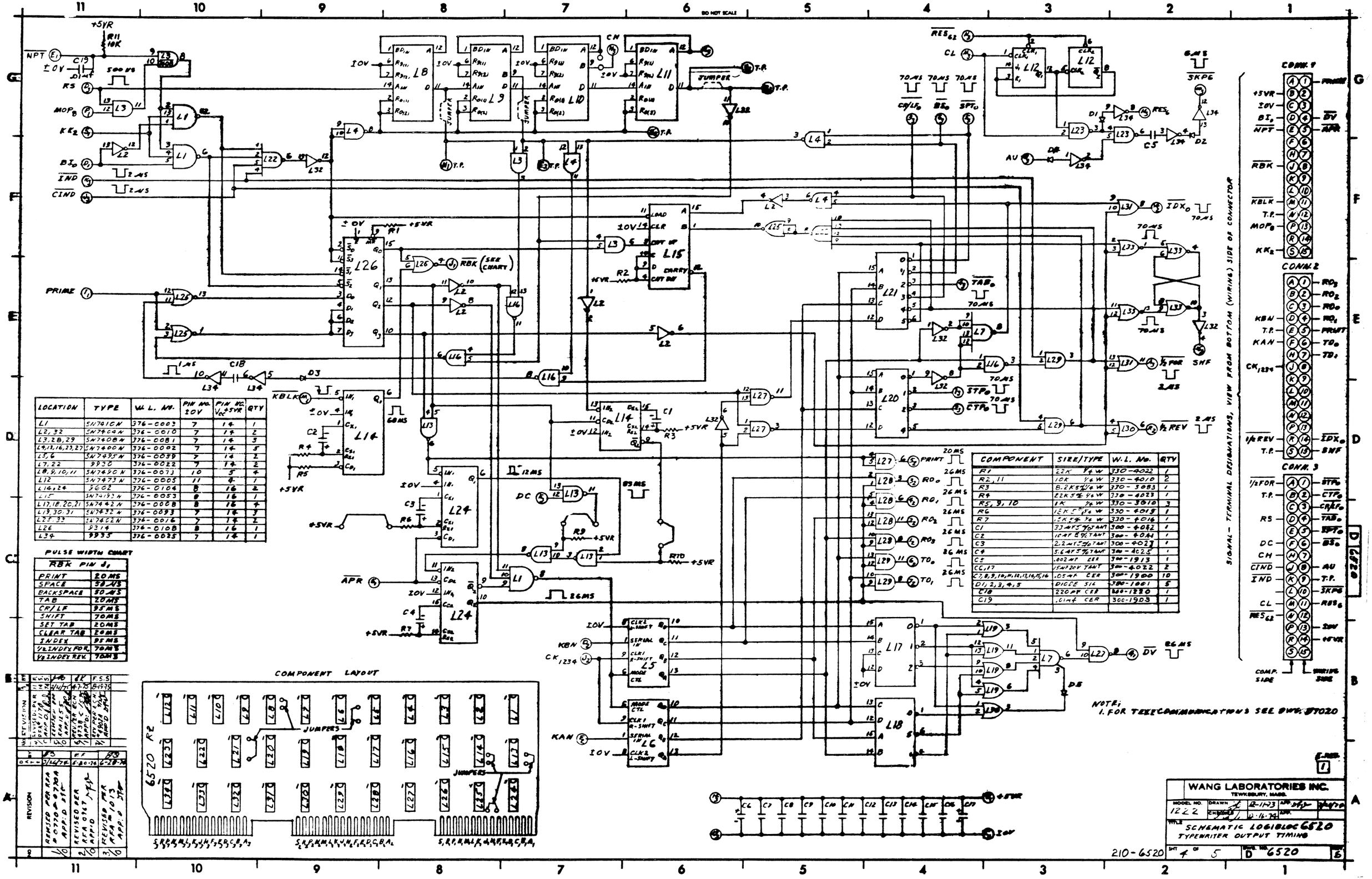

LOCATION	TYPE	WL L. NO.	PIN NO. 10V	PIN NO. V_{CC} +5VR	QTY
L1	SN7410N	376-0003	7	14	1
L2, 32	SN7404N	376-0010	7	14	2
L3, 28, 29	SN7408N	376-0081	7	14	3
L4, 13, 16, 23, 27	SN7400N	376-0002	7	14	5
L5, 6	SN7495N	376-0039	7	14	2
L7, 22	9930	376-0022	7	14	2
L8, 9, 10, 11	SN7490N	376-0073	10	5	4
L12	SN7473N	376-0005	11	4	1
L14, 24	3602	376-0104	8	16	2
L15	SN74193N	376-0053	8	16	1
L17, 18, 20, 21	SN7442N	376-0008	8	16	4
L19, 30, 31	SN7432N	376-0033	7	14	3
L23, 33	SN7402N	376-0016	7	14	2
L26	9314	376-0108	8	16	1
L34	9333	376-0025	7	14	1

PULSE WIDTH CHART

RBK PIN J_1	
PRINT	20 MS
SPACE	38 MS
BACKSPACE	80 MS
TAB	20 MS
CR/LF	95 MS
SHIFT	70 MS
SET TAB	20 MS
CLEAR TAB	20 MS
INDEX	95 MS
1/2 INDEX FOR	70 MS
1/2 INDEX REV.	70 MS

COMPONENT	SIZE/TYPE	W.L. NO.	QTY
R1	22K 1/4 W	330-4022	1
R2, 11	10K 1/4 W	330-4010	2
R3	8.2K 5% 1/4 W	330-3083	1
R4	22K 5% 1/4 W	330-4023	1
R5, 9, 10	1K 1/4 W	330-3010	3
R6	12K 5% 1/4 W	330-4012	1
R7	15K 5% 1/4 W	330-4016	1
C1	33 MF 5% 10 WT	300-4032	1
C2	10 MF 5% 7 WT	300-4041	1
C3	2.2 MF 5% 7 WT	300-4023	1
C4	5.6 MF 5% 7 WT	300-4025	1
C5	.002 MF CER	300-1913	1
C6, 17	15 MF 20V TANT	300-4022	2
C7, 8, 9, 10, 11, 12, 13, 14, 15, 16	.05 MF CER	300-1900	10
D1, 2, 3, 4, 5	DIODE SIL	380-1001	5
C18	220 PF CER	300-1820	1
C19	.01 MF CER	300-1903	1

REVISION			
1	REVISED PER RFA 0 0770 & 0780 APP: D STC	1/0	
2	REVISED PER RFA 0 1147 APP: D	2/0	
3	REVISED PER RFA # 1013 APP: D STC	3/0	

THIS DOCUMENT IS THE PROPERTY OF WANG LABORATORIES, INC. AND SHALL NOT BE REPRODUCED OR COPIED, OR USED AS A BASIS FOR THE MANUFACTURE OR SALE OF APPARATUS OR DEVICES WITHOUT PERMISSION.

DO NOT SCALE

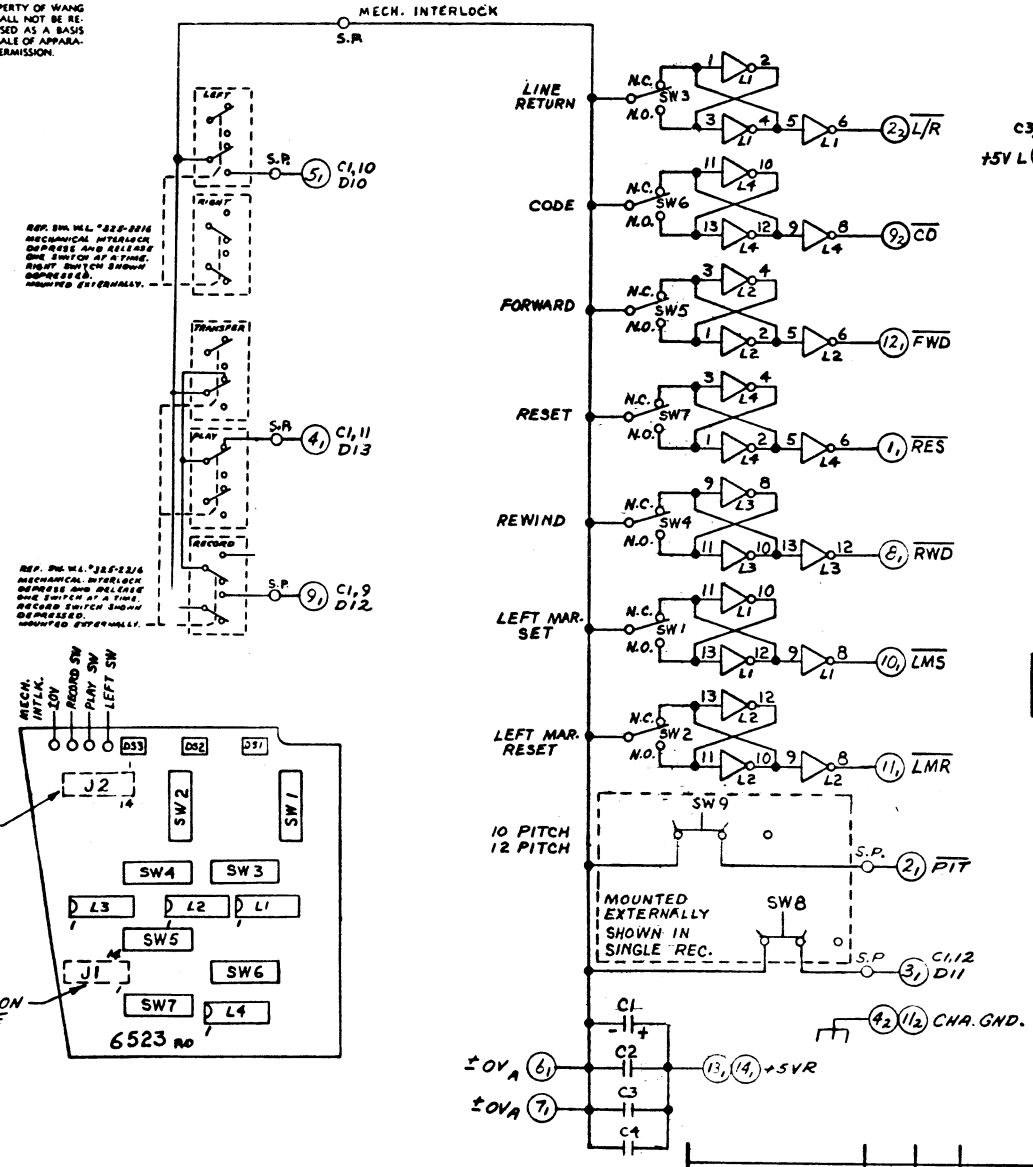

HOLE LEGEND		
DRILLED OR PUNCHED HOLE TOLERANCES:	HOLE DIA.	TOL.
	.0135 to .125	+.003 −.001
	.126 to .250	+.004 −.001
	.251 to .500	+.005 −.001

IDENT.	DESCRIPTION	QTY
A		

LOCATION	TYPE	W.L. PART NO.	TERM. NO. ±0V	TERM. NO. Vcc+5V	QTY.
L1-4	F9936	376-0026	7	14	4

COMPONENT	SIZE/TYPE	W.L. PART NO.	QTY.
C1	15μf 20V TANT	300-4022	1
C2	.05μf 12V CER	300-1900	1
C3, C4	.02 - 25V CER	300-1904	2
DS1, 2, 3, 4	CM 6833	370-0015	4
SW1 THRU 7	11SM1	325-2305	7
SW8 (EXT.)	704 SLIDE SW.	325-2108	1
J1, J2	14 PIN SOCKET	703-3788	2

E. REV. 0

WANG PART NO	ITEM	QTY	NAME	MATERIAL	DESCRIPTION
Qty Per Unit / FIRST USED ON / ASSY USED ON					

WANG LABORATORIES, INC. TEWKSBURY, MASS. U.S.A.

	BY	DATE	APPROVED BY	DATE
DWN	R.K.	1-3-74	E ENGR	
CHK			M ENGR	
E. C. CONTROL			MFG ENGR	

MATERIAL

MODEL NO. 1222

SEE ENGRG SPECIFICATIONS No.

FINISH

TOL. EX. AS NOTED .XX ± .010 FRAC. ± 1/64 .XXX ± .005 ANG ± 1°30' FINISH 125 √

SCALE SHT OF

TITLE SCHEMATIC LOGIBLOC # 6523
LEFT KEYBOARD FOR MODEL 1222

WANG PART NUMBER | SIZE C | DRAWING NUMBER 6523-1 | REV 2

REV	BY	DATE
0	LEC	4-6-74

REVISION: CHANGE PER ECN. # 2212 APP'D

6523-1 C

THIS DOCUMENT IS THE PROPERTY OF WANG LABORATORIES, INC. AND SHALL NOT BE REPRODUCED OR COPIED, OR USED AS A BASIS FOR THE MANUFACTURE OR SALE OF APPARATUS OR DEVICES WITHOUT PERMISSION

DO NOT SCALE

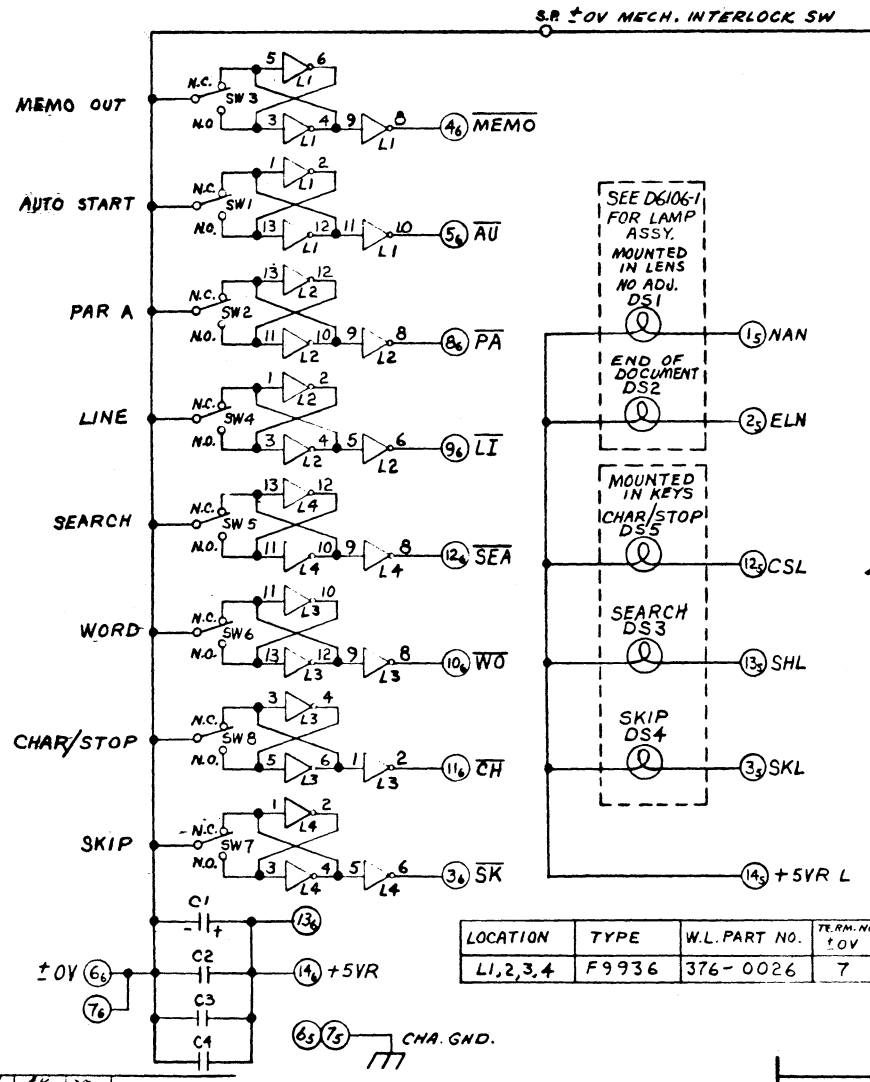

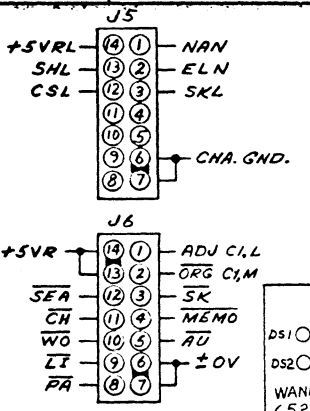

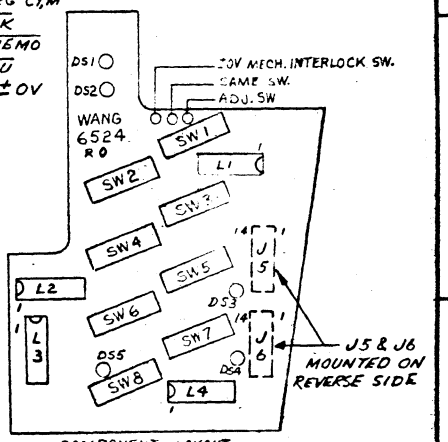

COMPONENT LAYOUT

HOLE LEGEND		
DRILLED OR PUNCHED HOLE TOLERANCES:	HOLE DIA.	TOL.
	.0135 to .125	±.003 −.001
	.126 to .250	±.004 −.001
	.251 to .500	±.005 −.001

IDENT.	DESCRIPTION	QTY.
A		

LOCATION	TYPE	W.L. PART NO.	TERM. NO. ±OV	TERM. NO. Vcc +5VR	QTY.
L1,2,3,4	F9936	376-0026	7	14	4

COMPONENT	SIZE/TYPE	W.L. PART NO.	QTY.
C1	15µf 20V TANT.	300-4022	1
C2	.05µf 12V CER.	300-1900	1
C3, C4	.02µf 25V CER	300-1904	2
DS1 - 5	CMB-820	370-0015	5
SW1 - 8	11SM1	325-2305	8
J1, J2	14PIN CONN	376-9012	2

E. REV. 0

REVISION	BY	DATE	APPD.
A	CHANGED PER RFA-0754	AK 5-27-74	5-7-74
B	CHANGED PER RFA-0734	AK 5-7-74	
1/0	CHANGED PER E.C.A. # 4212	AK 6-6-74	

WANG PART NO	ITEM	QTY	NAME
Qty. Per Unit / FIRST USED ON / ASSY USED ON			

WANG LABORATORIES, INC. TEWKSBURY, MASS. U.S.A.

MATERIAL

FINISH

MODEL NO 1222

SEE ENGRG SPECIFICATIONS No

TOL EX AS NOTED XX ± .010 FRAC ± 1/64 XXX ± .005 ANG ± 1°30' FINISH √125

SCALE SHT OF

MATERIAL	DESCRIPTION		
BY	DATE	APPROVED BY	DATE
DWN AK	1-2-73	E ENGR	
CHK		M ENGR	
E C CONTROL		MFG ENGR	

TITLE SCHEMATIC LOGIBLOC RIGHT KEYBOARD FOR MODEL 1222

WANG PART NUMBER	SIZE	DRAWING NUMBER	REV
	C	6524-1	0

6524-1 C

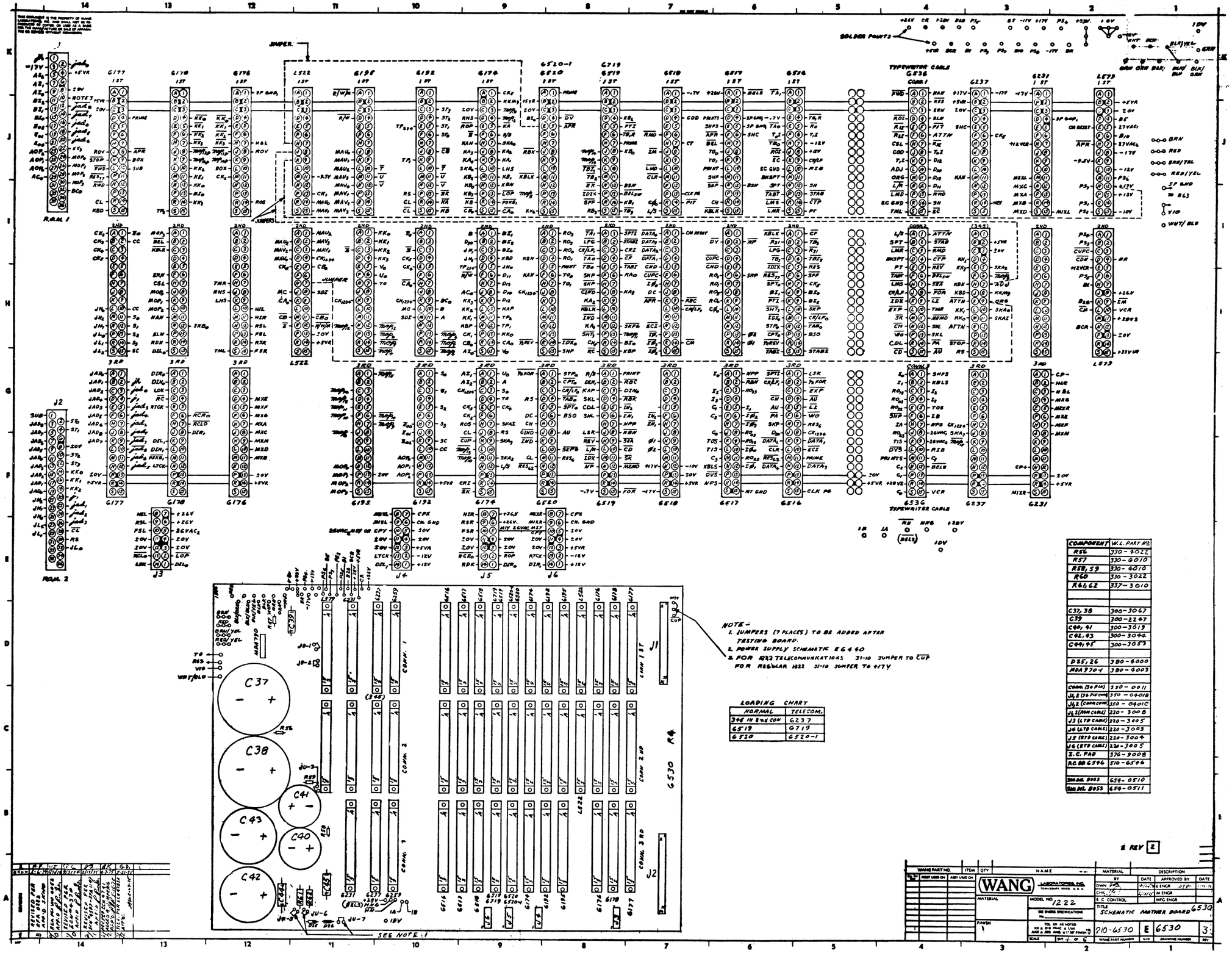

LOADING CHART	
NORMAL	TELECOM.
348 IN 8 ½ CON	6237
6519	6719
6520	6520-1

COMPONENT	W.L. PART NO.
R56	330-4022
R57	330-6010
R58, 59	330-6010
R60	330-3022
R61, 62	337-3010
C37, 38	300-3067
C39	300-2247
C40, 41	300-3019
C42, 43	300-3044
C44, 45	300-3053
D25, 26	380-6000
MDA 3704	380-4003
CONN. (30 PIN)	350-0011
J4, 2 (36 PIN CONN)	350-0401B
J4, 2 (CONN COVER)	350-0401C
J4, 1 (RAM CABLE)	220-3008
J3 (LTD CABLE)	220-3005
J4 (LTD CABLE)	220-3003
J5 (RTD CABLE)	220-3004
J6 (RTD CABLE)	220-3005
I.C. PAD	376-9008
P.C. BD 6596	510-6596
SMALL BOSS	654-0510
SMALL BOSS	654-0511

REV 2

WANG PART NO.	ITEM	QTY	NAME	MATERIAL	DESCRIPTION
			WANG LABORATORIES, INC. TEWKSBURY, MASS. U.S.A.		

	BY	DATE	APPROVED BY	DATE
DWN			E ENGR	
CHK			M ENGR	
E C CONTROL			MFG ENGR	

MODEL NO. 1222

TITLE SCHEMATIC MOTHER BOARD 6530

FINISH 1

910-6530 | E | 6530 | 3

WANG PART NUMBER | SIZE | DRAWING NUMBER | REV

THIS DOCUMENT IS THE PROPERTY OF WANG LABORATORIES, INC. AND SHALL NOT BE REPRODUCED OR COPIED, OR USED AS A BASIS FOR THE MANUFACTURE OR SALE OF APPARATUS OR DEVICES WITHOUT PERMISSION.

DO NOT SCALE

HOLE LEGEND			
DRILLED OR PUNCHED HOLE TOLERANCES:	HOLE	DIA	TOL
	.0135 to .125		± .001
	.126 to .250		± .001
	.251 to .500		± .001

IDENT.	DESCRIPTION	QTY
A		

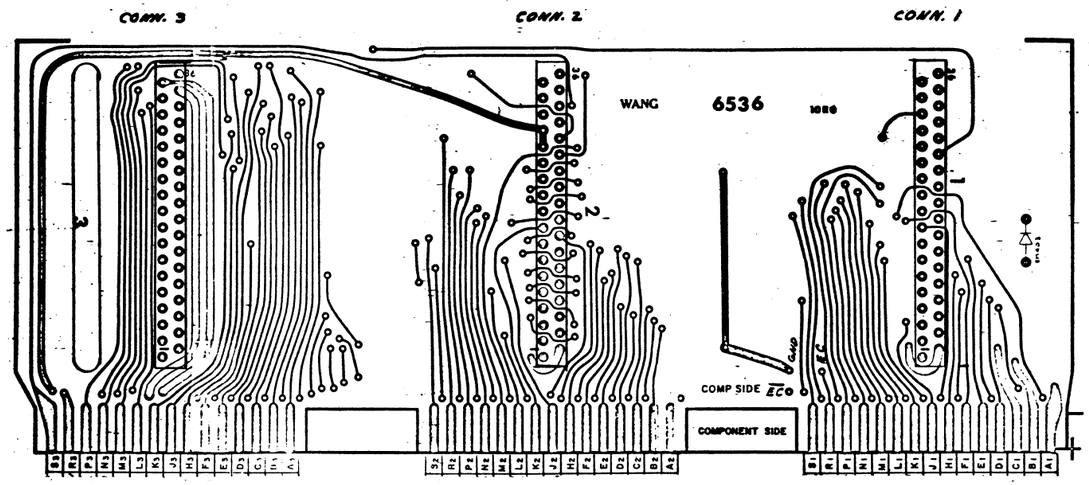

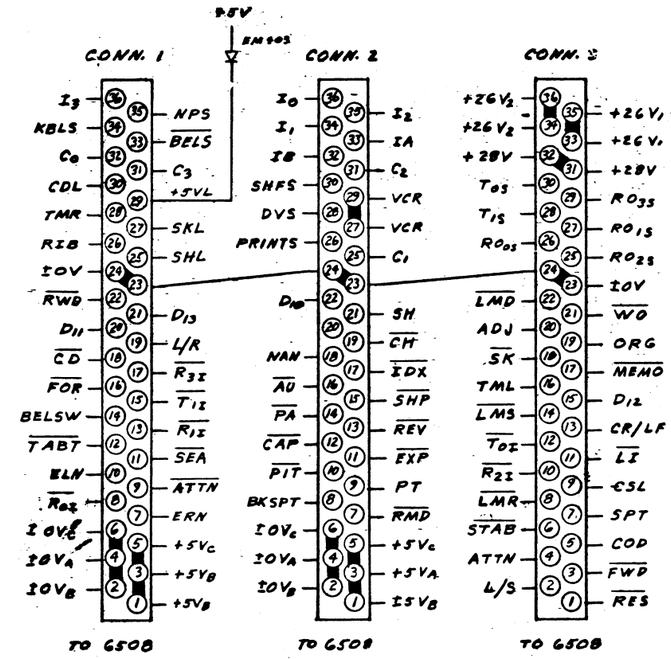

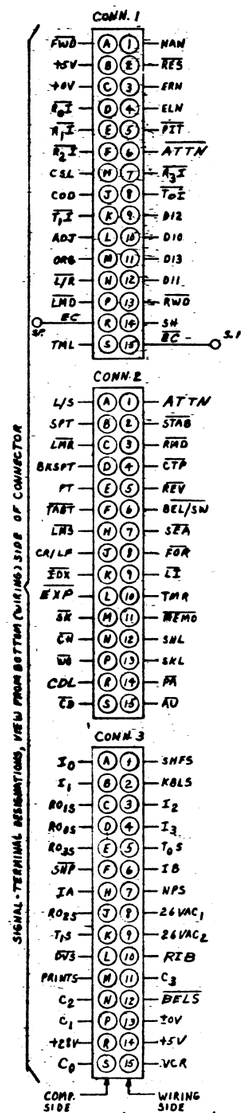

WANG LABORATORIES INC.

PL 6536-4 | 0

ASSY P/N 210-6536 | SHEET 1 OF 1 | REV

MAIN HARNESS

DRAWN 3-8-74
CHK 5-28-74
APPD 5-28-74
APPD

TYPEWRITER INPUT CABLE BOARD

QTY. PER BASIC NO.			KEY	WANG PART NUMBER	WANG DRAWING NUMBER	NOMENCLATURE OR DESCRIPTION	ITEM NO.
			A				
		1		510-6536 --		6536 P.C. BOARD	1
							2
		1		380-4000		EM 403 RECTIFIER HIGH VOLTAGE	3
							4
		3		350-0401-B		36 PIN FLAT CABLE CONN BOTTOM	5
							6
							7
							8
							9
		X			6536-1	SCHEMATIC	10

REVISION DESCRIPTION	DATE	APPROVED	SYM	REVISION DESCRIPTION	DATE	APPROVED
PREPRODUCTION WAS REV. "A" PRODUCTION REV. "0"	5-28-74					

NOTES:
1. ASTERISK ITEMS FOR PROCUREMENT OR PART NUMBER AND SPECIFICATION CONTROL OR SOURCE CONTROL DRAWING
P = PART
D = DRAWING
M = MATERIAL

MODEL 1222

PL 6536-4

REV	REVISION	BY	DATE
A	REVISED PER RFA 0122 APP'D	M.F.	5-7-74
B	REVISED PER RFA 0122 WAD APP'D DLSC	M.F.	5-22-74

WANG PART NO	ITEM	QTY	NAME	MATERIAL	DESCRIPTION
Qty. Per Used / FIRST USED ON / ASSY USED ON					

WANG LABORATORIES, INC. TEWKSBURY, MASS. U.S.A.

MATERIAL

FINISH

MODEL NO. 1222

SEE ENGRG SPECIFICATIONS No.

TOL. EX. AS NOTED .XX ± .010 FRAC. ± 1/64 .XXX ± .005 ANG. ± 1°30' FINISH 125

SCALE | SHT 1 OF 1

BY	DATE	APPROVED BY	DATE
DWN	3/26/74	E ENGR	6-28-74
CHK		M ENGR	
E. C. CONTROL		MFG ENGR	

TITLE TYPEWRITER INPUT CABLE BOARD 6566

WANG PART NUMBER	SIZE	DRAWING NUMBER	REV
210-6536	D	6536-1	0

THIS DOCUMENT IS THE PROPERTY OF WANG LABORATORIES, INC. AND SHALL NOT BE REPRODUCED OR COPIED, OR USED AS A BASIS FOR THE MANUFACTURE OR SALE OF APPARATUS OR DEVICES WITHOUT PERMISSION.

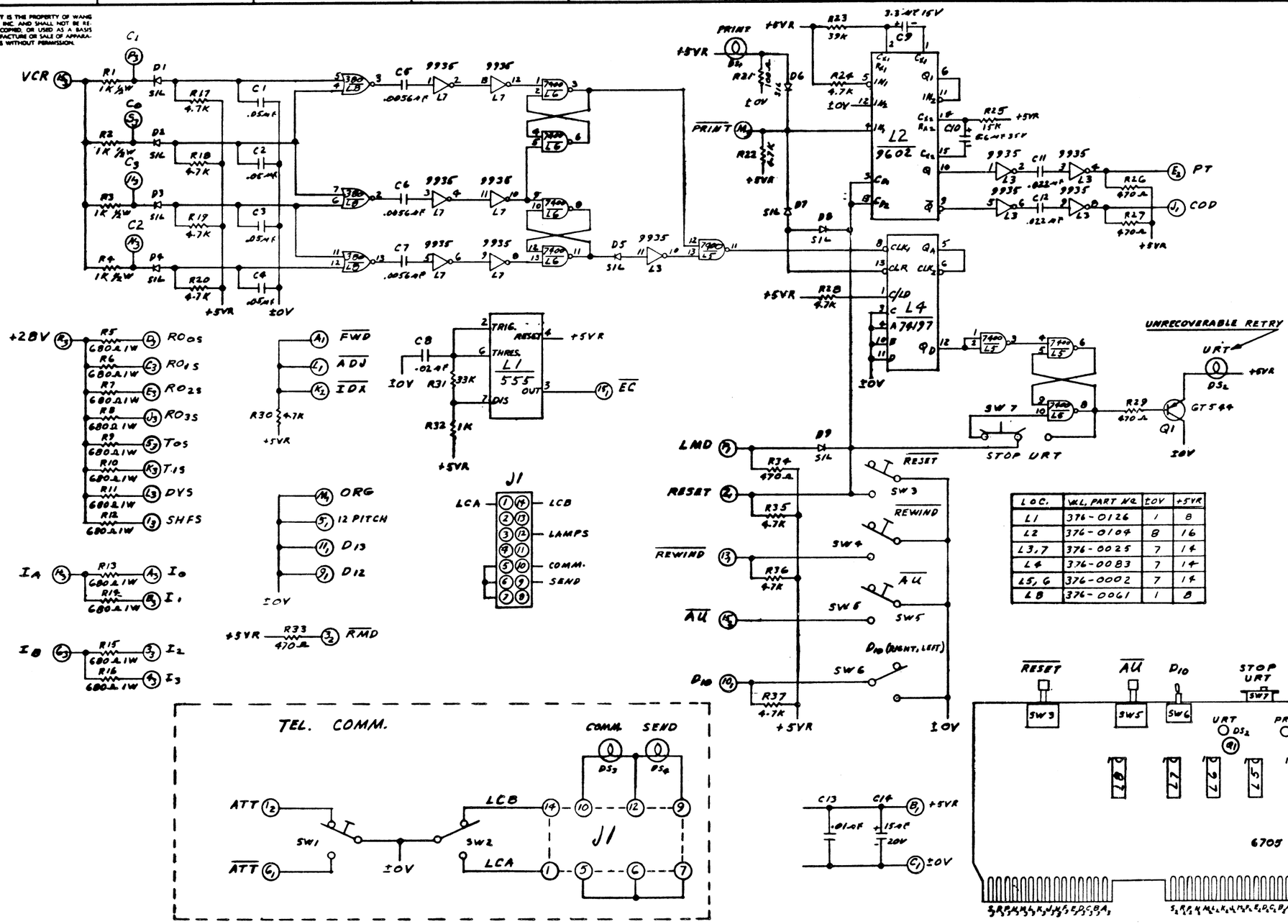

LOC.	WL. PART NO	±0V	+5VR
L1	376-0126	1	8
L2	376-0104	8	16
L3,7	376-0025	7	14
L4	376-0083	7	14
L5,6	376-0002	7	14
L8	376-0061	1	8

COMPONENT	WL. PART NO
R1, 2, 3, 4	331-3010
R5 THRU 16	332-2068
R17, 18, 19, 20, 22, 24, 28, 30, 35, 36, 37	330-3047
R21	330-2010
R23	330-4039
R25	330-4015
R26, 27, 29, 33, 34	330-2047
R31	330-4033
R32	330-3010
C1, 2, 3, 4	300-1900
C5, 6, 7	300-1915
C8	300-1904
C9	300-4016
C10	300-4017
C11, 12	300-1927
C13	300-1903
C14	300-4022
DS1, DS2, DS3, DS4	370-0015
D1 THRU 9	380-1001
Q1	375-1017
Q1	375-9004
SW1, 3, 4, 5	325-2305
SW2, 6	325-0006
SW7	325-2110
J1	376-9001

HOLE LEGEND	HOLE DIA	TOL
DRILLED OR PUNCHED HOLE TOLERANCES	0135 to 125	±.001
	126 to 250	±.001
	251 to 500	±.001

SYMB.	DESCRIPTION	QTY
A		

CONN. 1: FWD, +5VR, ±0V, COD, ADJ, ORG, LMD, RESET, 12PITCH, ATT, D12, D10, D13, REWIND, EC

CONN. 2: PT, IDX, ATT, RMD, AU

CONN. 3: I0, I1, R0 1S, R0 0S, R0 2S, IA, R0 3S, T1S, DVS, PRINT, C2, C1, +28V, C0, SHFS, I2, I3, T0S, IB, C3, VCR

SIGNAL - TERMINAL DESIGNATIONS, VIEW FROM BOTTOM (WIRING) SIDE OF CONNECTOR

COMP. SIDE — WIRING SIDE

E REV 0

REV	REVISION	BY	DATE
E	REVISED PER RFA # 1499 APP'D P.R.S.		2-4-75

WANG PART NO	ITEM	QTY	NAME	MATERIAL	DESCRIPTION
			WANG LABORATORIES, INC. TEWKSBURY MASS. U.S.A.		

	BY	DATE	APPROVED BY	DATE
DWN			E ENGR	
CHK			M ENGR	
E C CONTROL			MFG ENGR	

MODEL NO 1222

TITLE SCHEMATIC, LOGIBLOC SIMULATOR

MATERIAL

FINISH

SEE ENGRG SPECIFICATIONS No.

TOL EX AS NOTED XX ± .010 FRAC ± 1/64 XXX ± .005 ANG. ± 1°30' FINISH 125

SCALE — SHT 4 OF 6

WANG PART NUMBER	SIZE	DRAWING NUMBER	REV
210-6705	D	6705	C

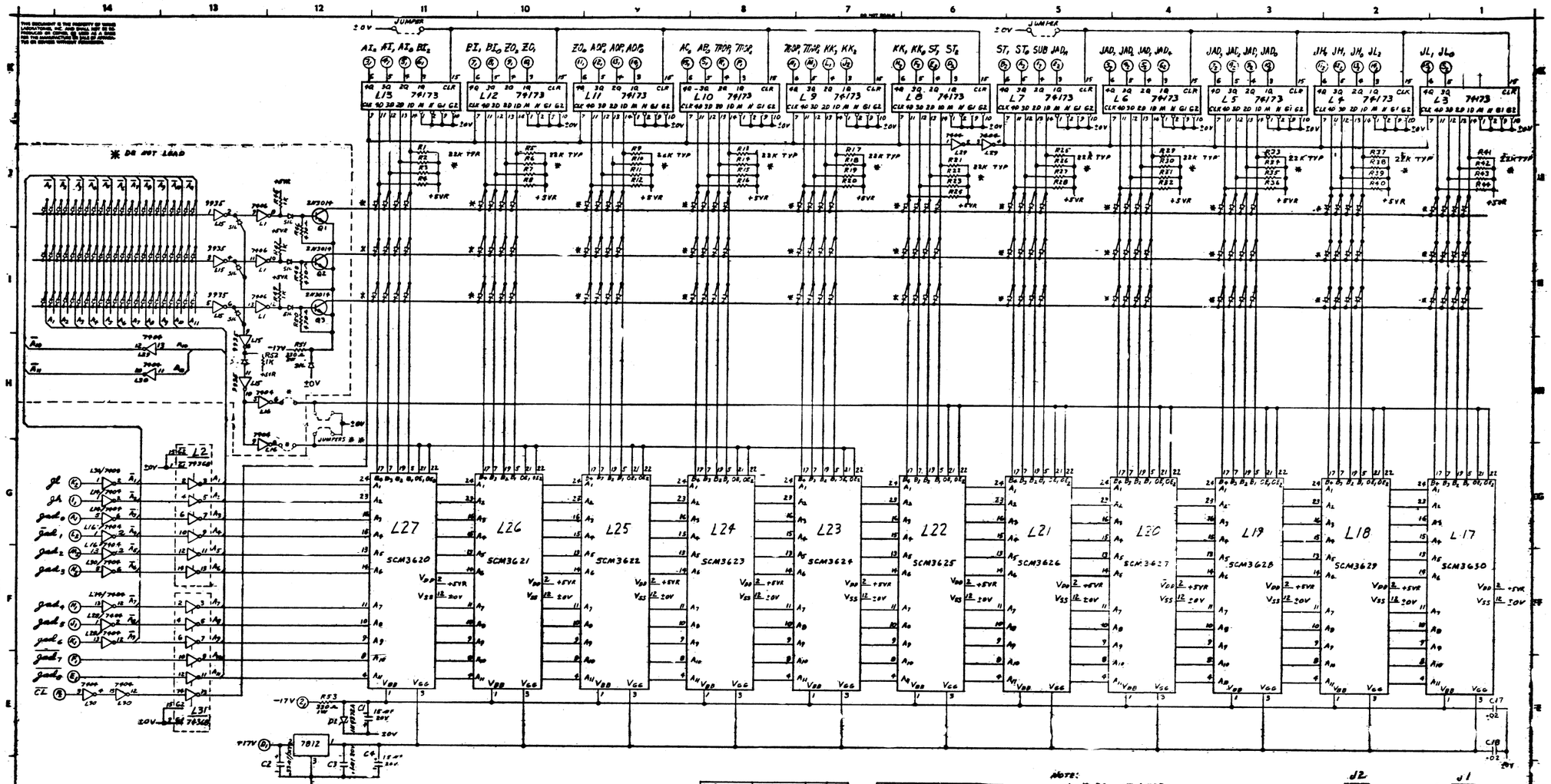

LOCATION	W.L. PART No.	±0V	+5VR
L2, 31	376-0179	8	14
L3 THRU 13	376-0183	8	16
L14, 28, 29, 30, 16	376-0810	7	14
L17	377-0281	12	2
L18	377-0281	12	2
L19	377-0280	12	2
L20	377-0279	12	2
L21	377-0278	12	2
L22	377-0277	12	2
L23	377-0276	12	2
L24	377-0275	12	2
L25	377-0274	12	2
L26	377-0273	12	2
L27	377-0272	12	2
W THRU 27 I.C. SOCKET	376-9003		
* L1	376-0055	7	14
* L15	376-0025	7	14

COMPONENT	W.L. PART No.
R53	332-2033
* R1-46	330-4022
C1, 4, 6, 8, 12, 15	300-4022
C2	300-4008
C3	300-1918
C5, 7, 9-11, 13, 14-18	300-1904
* R45, 47, 49, 52	330-3010
D1	380-2129
* R46, 48, 50	330-2047
U7 7812	374-0000
* R51	332-2033
J1, 2 CONN.	350-0011
* D	380-1001-38

NOTE:
1. * DO NOT LOAD
2. * ALL DIODES ARE 380-1001
3. * LOAD ONLY WHEN DIODE PATCH OPTION IS USED
4. * REMOVE JUMPERS WHEN DIODE PATCH IS USED

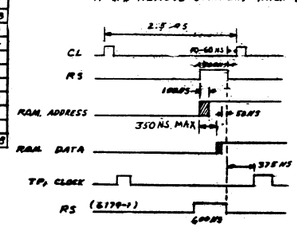

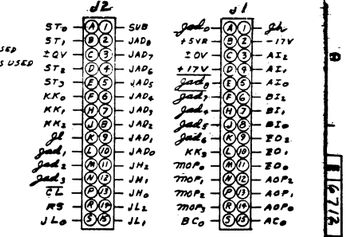

E-REV

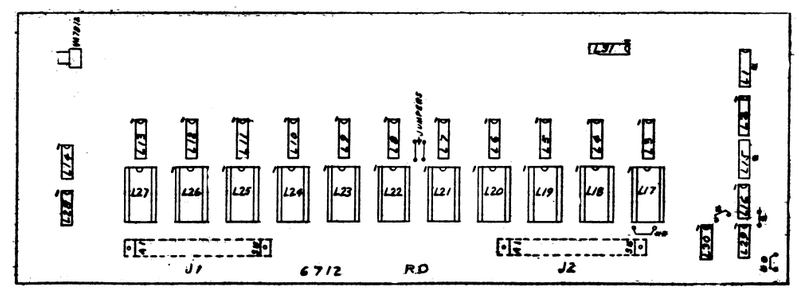

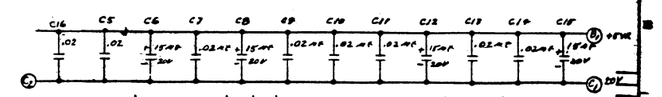

WANG PART NO	ITEM	QTY	NAME	MATERIAL	DESCRIPTION
			WANG LABORATORIES, INC. TEWKSBURY, MASS. U.S.A.		
			MODEL NO. 1203/1222		
			TITLE SCHEMATIC LOGIBLOC MOTOROLA R.D. M.		
			210-6712	E	6712

BY	DATE	APPROVED BY	DATE
DWN	3/1/72	E ENGR	4-3-72
CHK	4/1/72	M ENGR	
		I C CONTROL	MFG ENGR

MATERIAL

FINISH

TOL. EX. AS NOTED
XX ± .010 FRAC ± 1/64
XXX ± .005 ANG. ± 1°30' FINISH ±%

SCALE SHT. 1 OF 1

WANG PART NUMBER SIZE DRAWING NUMBER REV

REV# 1605

THIS DOCUMENT IS THE PROPERTY OF WANG LABORATORIES, INC. AND SHALL NOT BE RE-PRODUCED OR COPIED OR USED AS A BASIS FOR THE MANUFACTURE OR SALE OF APPARATUS OR SERVICE WITHOUT PERMISSION.

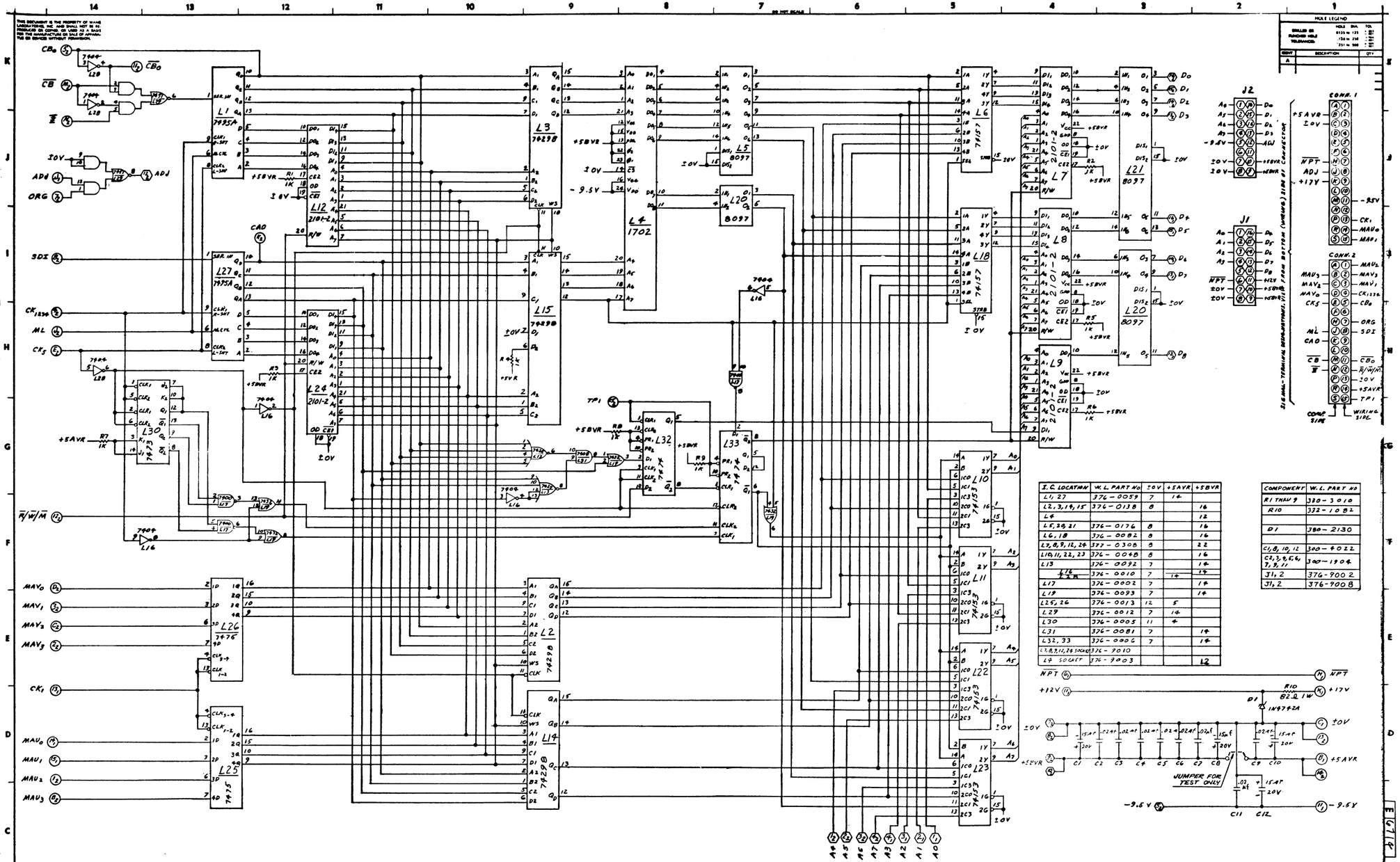

I.C. LOCATION	W.L. PART NO	±0V	+5AVR	+5BVR
L1, 27	376-0059	7	14	
L2, 3, 14, 15	376-0138	8		16
L4				12
L5, 20, 21	376-0176	8		16
L6, 18	376-0082	8		16
L7, 8, 9, 12, 24	377-0308	8		22
L10, 11, 22, 23	376-0048	8		16
L13	376-0092	7		14
L16	376-0010	7	14	14
L17	376-0002	7		14
L19	376-0093	7		14
L25, 26	376-0013	12	5	
L29	376-0012	7	14	
L30	376-0005	11	4	
L31	376-0081	7		14
L32, 33	376-0006	7		14
L7, 8, 9, 11, 24 SOCKET	376-9010			
L4 SOCKET	376-9003			12

COMPONENT	W.L. PART NO
R1 THRU 9	320-3010
R10	322-1082
D1	380-2130
C1, 8, 10, 12	300-4022
C2, 3, 4, 5, 6, 7, 9, 11	300-1904
J1, 2	376-9002
J1, 2	376-9008

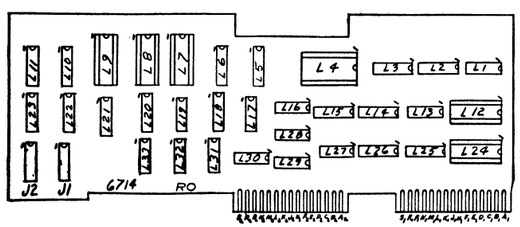

PRODUCTION

E-REV

WANG PART NO	ITEM	QTY	NAME	MATERIAL	DESCRIPTION
			WANG LABORATORIES, INC. TEWKSBURY, MASS. U.S.A.		
			MODEL NO 1222		
			SEE ENGRG SPECIFICATIONS		
			TOL EX AS NOTED .XX ± .010 FRAC ± 1/64 .XXX ± .005 ANG. ± 1°30' FINISH		
			SCALE SHT 1 OF 6		

BY	DATE	APPROVED BY	DATE
DWN	4-9-71	E ENGR	
CHK	5-8-71	M ENGR	
E C CONTROL		MFG ENGR	

TITLE CRT R.A.M.

WANG PART NUMBER	SIZE	DRAWING NUMBER	REV
210-6714	E	6714	0

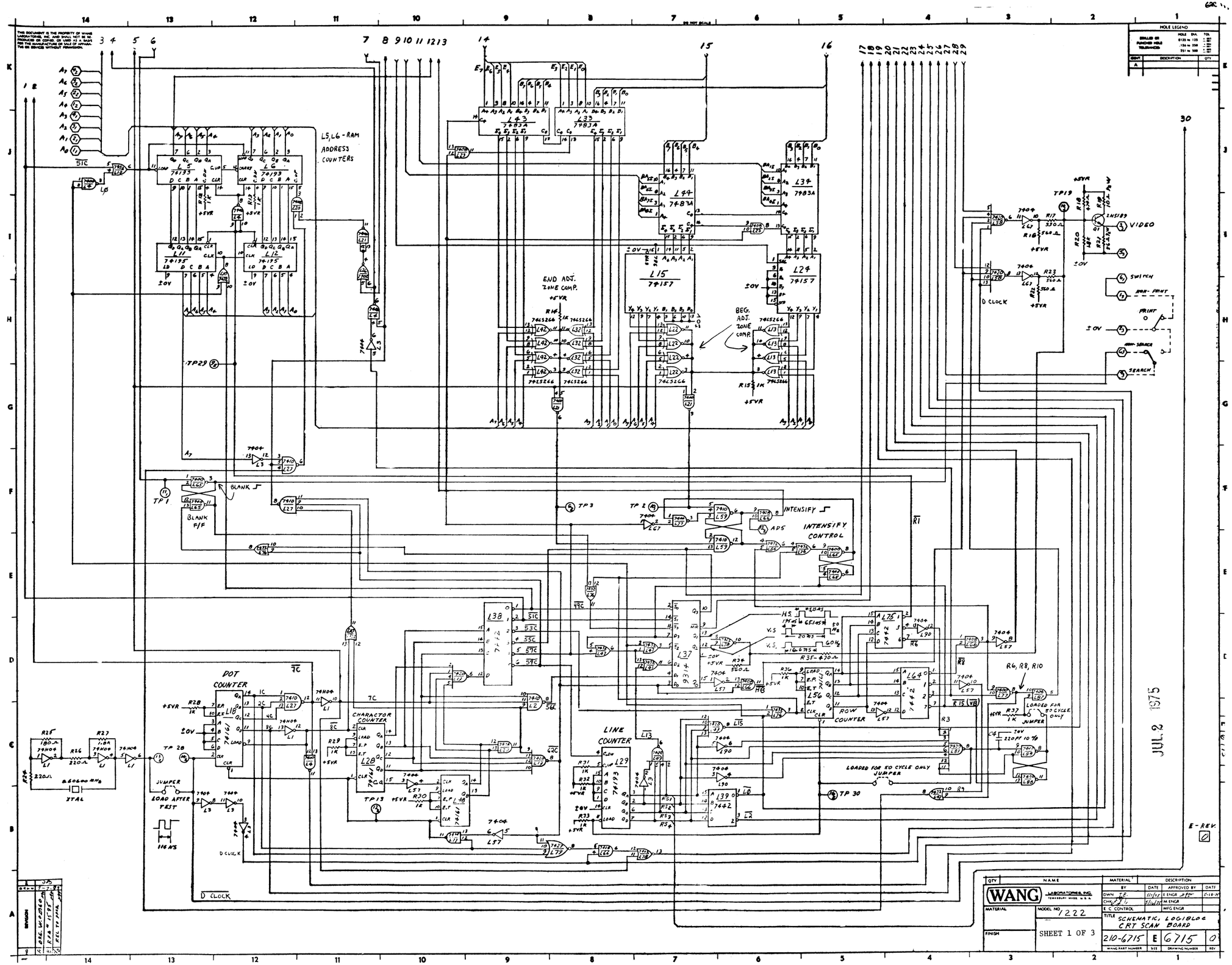
L5, L6 - RAM ADDRESS COUNTERS
END ADJ. ZONE COMP.
BEG. ADJ. ZONE COMP.
VIDEO
SWITCH
NON-PRINT
PRINT
SEARCH
D CLOCK
BLANK
BLANK F/F
INTENSIFY
INTENSIFY CONTROL
DOT COUNTER
CHARACTOR COUNTER
LINE COUNTER
ROW COUNTER
LOAD AFTER TEST
JUMPER
XTAL
LOADED FOR 50 CYCLE ONLY JUMPER
R6, R8, R10
E-REV.
JUL 2 1975
WANG LABORATORIES, INC.
MODEL NO. 1222
SHEET 1 OF 3
SCHEMATIC, LOGIBLOC CRT SCAN BOARD
210-6715 E 6715 0

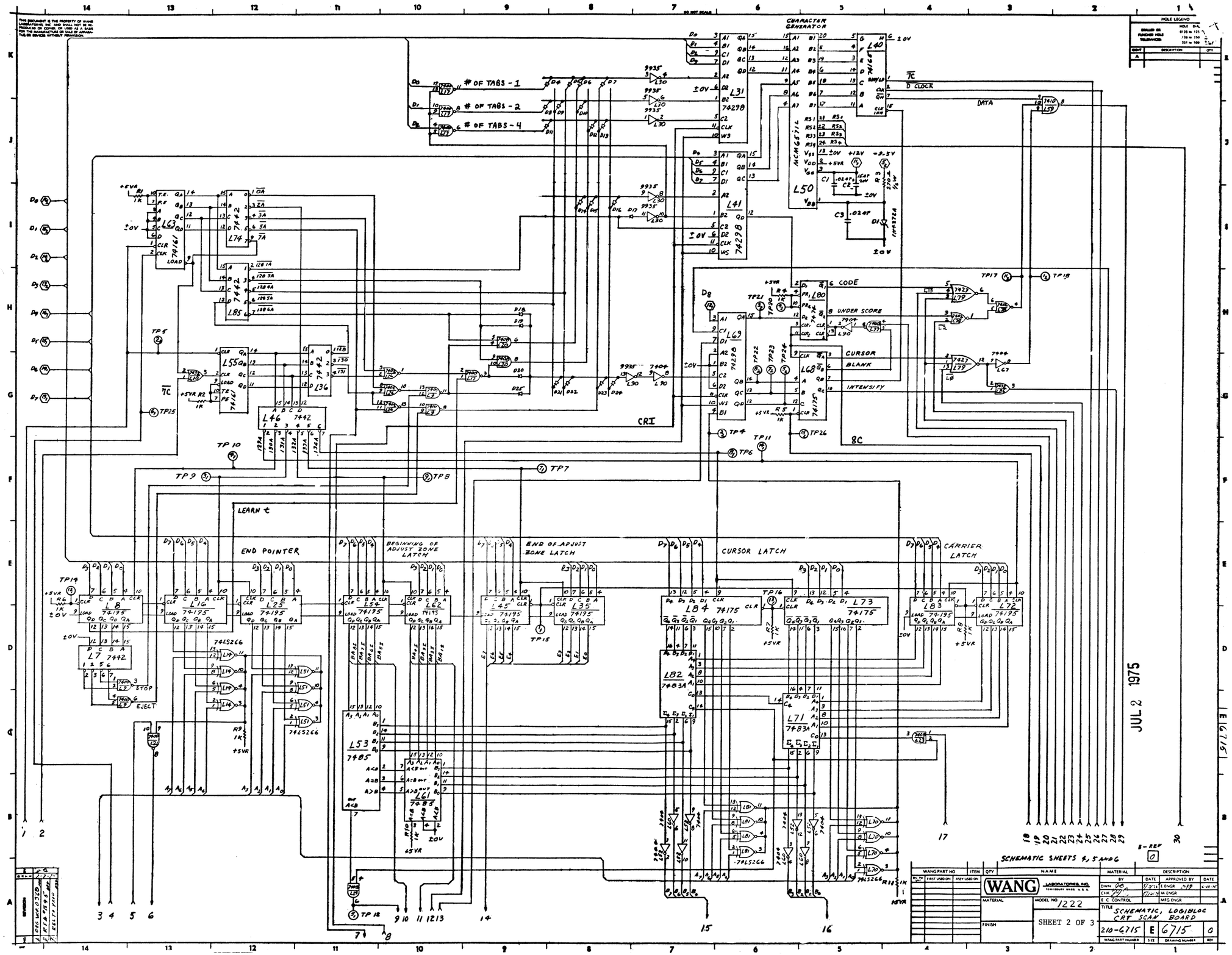
CHARACTER GENERATOR
OF TABS - 1
OF TABS - 2
OF TABS - 4
D CLOCK
DATA
CODE
UNDER SCORE
CURSOR
BLANK
INTENSIFY
CRI
8C
LEARN t
END POINTER
BEGINNING OF ADJUST ZONE LATCH
END OF ADJUST ZONE LATCH
CURSOR LATCH
CARRIER LATCH
STOP
EJECT
JUL 2 1975
SCHEMATIC SHEETS 4, 5 AND 6
WANG LABORATORIES, INC.
SHEET 2 OF 3
SCHEMATIC, LOGIBLOC CRT SCAN BOARD
210-6715
E 6715
0

THIS DOCUMENT IS THE PROPERTY OF WANG LABORATORIES, INC. AND SHALL NOT BE REPRODUCED OR COPIED, OR USED AS A BASIS FOR THE MANUFACTURE OR SALE OF APPARATUS OR SERVICE WITHOUT PERMISSION.

DO NOT SCALE

HOLE LEGEND			
DRILLED OR PUNCHED HOLE TOLERANCES	HOLE DIA.	TOL.	
	.0120 to .130	±.002	
	.136 to .250	±.003	
	.251 to .500	±.004	
SHMT.	DESCRIPTION	QTY.	
A			

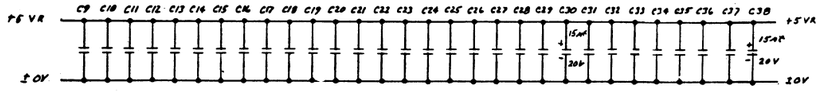

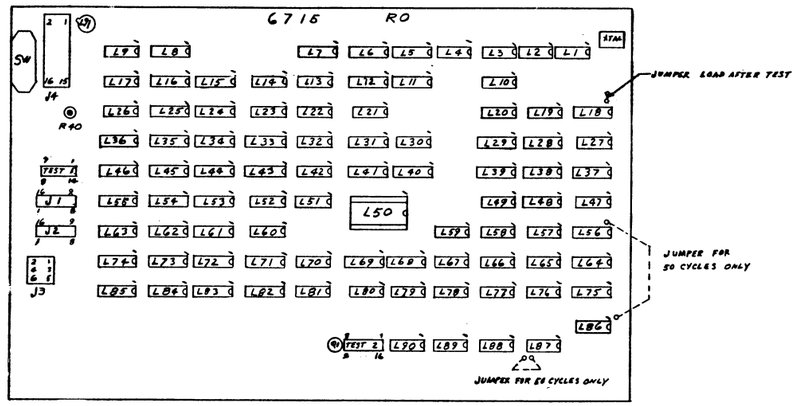

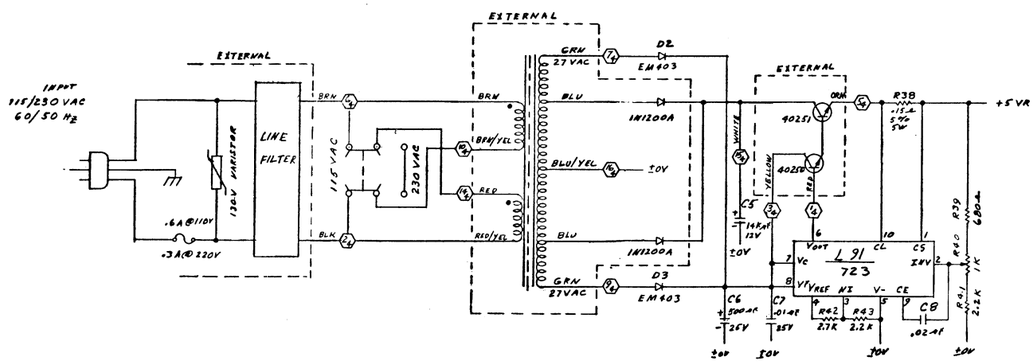

I.C. LOCATION	W.L. PART No.	±0V	+5VR
L1	376-0095	7	14
L2, 27, 59	376-0003	7	14
L3, 52, 57, 60, 67, 90	376-0010	7	14
L4, 9, 17, 21, 65, 77, 88	376-0002	7	14
L5, 6, 29	376-0053	8	16
L7, 36, 38, 39, 46, 64, 74, 75, 85	376-0008	8	16
L8, 11, 12, 16, 25, 35, 45, 54, 62, 72, 83	376-0007	8	16
L10, 43, 76, 86	376-0073	7	14
L13, 14, 22, 32, 42, 51, 70, 81	376-0168	7	14
L15, 24	376-0082	8	16
L18, 28, 48, 55, 56, 63	376-0054	8	16
L19, 49, 58	376-0064	7	14
L20, 23, 66, 87	376-0081	7	14
L26, 78	376-0016	7	14
L30	376-0035	7	15
L31, 41, 69	376-0138	8	16
L33, 34, 43, 44, 71, 82	376-0018	12	5
L37	376-0108	8	16
L40	376-0105	8	16
L50	377-0309	13	2
L53, 61	376-0087	8	16
L68, 73, 84	376-0119	8	16
L79	376-0125	7	14
L80	376-0006	7	14
L89	376-0031	7	14
L91	376-0066		
L50 SOCKET	376-9003		

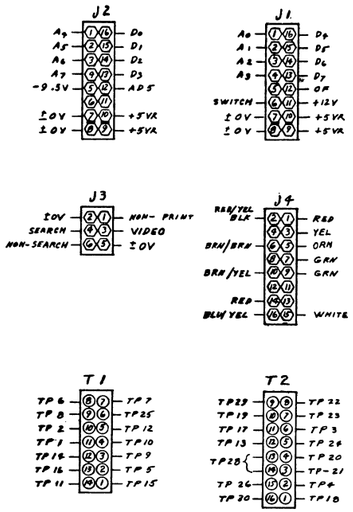

COMPONENT	W.L. PART NO
R12, 4 THRU 15, R28 THRU 33, 36, 37	330-3010
R3	331-2027
R16, 22, 23, 34	330-2036
R17	330-2033
R18, 35	330-2047
R19	331-1010
R20, 27	330-3018
R21	331-1056
R24, 26	330-2022
R25	330-2018
R38	334-0015
R39	330-2069
R40	336-1001
R41, 43	330-3022
R42	330-3027
C1, 3, 8 THRU 29, C31 THRU 37	300-1904
C2, 30, 38	300-4022
C4	300-1221
C5	300-3061
C6	300-3036
C7	300-1903
D4 THRU 25	380-1000
D1	380-2129
D2, 3	380-4000
Q1	375-1021
TRANSIPAD	375-9001
XTAL	321-0012
SWITCH (SLIDE)	325-2112
J1, J2, T2	376-900C
J3	659-1186
J4	659-1177
T1	376-9012

	ZONE	SHT.		ZONE	SHT.
L1	C14, C11	1	L47	D8, D7, C4	1
L2	D9	1	L48	B10	1
L3	B11, F12, H11, C7	1	L49	C6, C7	1
L4	J14, I12, H11, C11	1	L50	J6	2
L5	J13	1	L51	C11	2
L6	J12	1	L52	B7, B6	2
L7	D14	2	L53	C11	2
L8	D14	2	L54	D11	2
L9	C14, G10	2	L55	G12	2
L10	J14, I13, D11	1	L56	D5	1
	G13	2	L57	B9, B10, D7, D5, D3	1
L11	I13	1	L58	I3	1
L12	I12	1	L59	F7	1
L13	H6	1		J3	2
L14	D13	2	L60	B7, B6	2
L15	I7	1	L61	B10	2
L16	D13	2	L62	D10	2
L17	J10, G9	2	L63	I13	2
L18	C11	1	L64	D4	1
L19	D10, C9	1	L65	F13, F5	1
L20	I12, C9	1	L66	B8, F6, D6, D3	1
	H9	2	L67	F7, I3	1
L21	I11, G8, G7	1		G3	2
	C13	2	L68	G5	2
L22	H7	1	L69	H6	2
L23	J10, I6	1	L70	B5	2
	A11, C4	2	L71	C6	2
L24	I6	1	L72	E3	2
L25	D12	2	L73	E5	2
L26	I11	1	L74	I12	2
	G10	2	L75	E5	1
L27	F12, C12	1	L76	E12, E8, F6, D6	1
L28	C11	1	L77	B10, F7, D3	1
L29	C8	1		H5	2
L30	J7, I7, C7	2	L78	D6, B7	1
L31	J6	2		H3	2
L32	H8	1	L79	B8	1
L33	J8	1		H4	2
L34	J6	1	L80	H5	2
L35	D8	2	L81	B6	2
L36	G11	2	L82	D7	2
L37	D7	1	L83	E4	2
L38	E9	1	L84	E7	2
L39	C7	1	L85	H12	2
L40	K5	2	L86	F6	1
L41	I6	2		G3	2
L42	H9	1	L87	D3	1
L43	J9	1	L88	C3	1
L44	J7	1	L89	C4	1
L45	D9	2	L90	C7, E4	1
L46	G12	2		C7, H5	2

E-PROM
0

REVISION			
9	ADD W-0028	7-7-77	RT
8	ECN W-0178		11-11-75
7	ECN W-0154		
6	REL TO ECN W-0154 REVISED PER RFA-1723 APPD. BY		

WANG PART NO	ITEM	QTY	NAME	MATERIAL	DESCRIPTION
			WANG LABORATORIES, INC. TEWKSBURY, MASS. U.S.A.		
			MODEL NO. 7222		BY / DATE / APPROVED BY / DATE
					DWN T.B. 5/1/76 / E ENGR TB 5/4/76
					CHK R.P.L. 5/4/76 / M ENGR
					E C CONTROL / MFG ENGR
			MATERIAL		TITLE SCHEMATIC, LOGIBLOC CRT SCAN BOARD
			FINISH	SHEET 3 OF 3	210-6715 / E / 6715 / 1
					WANG PART NUMBER / SIZE / DRAWING NUMBER / REV.

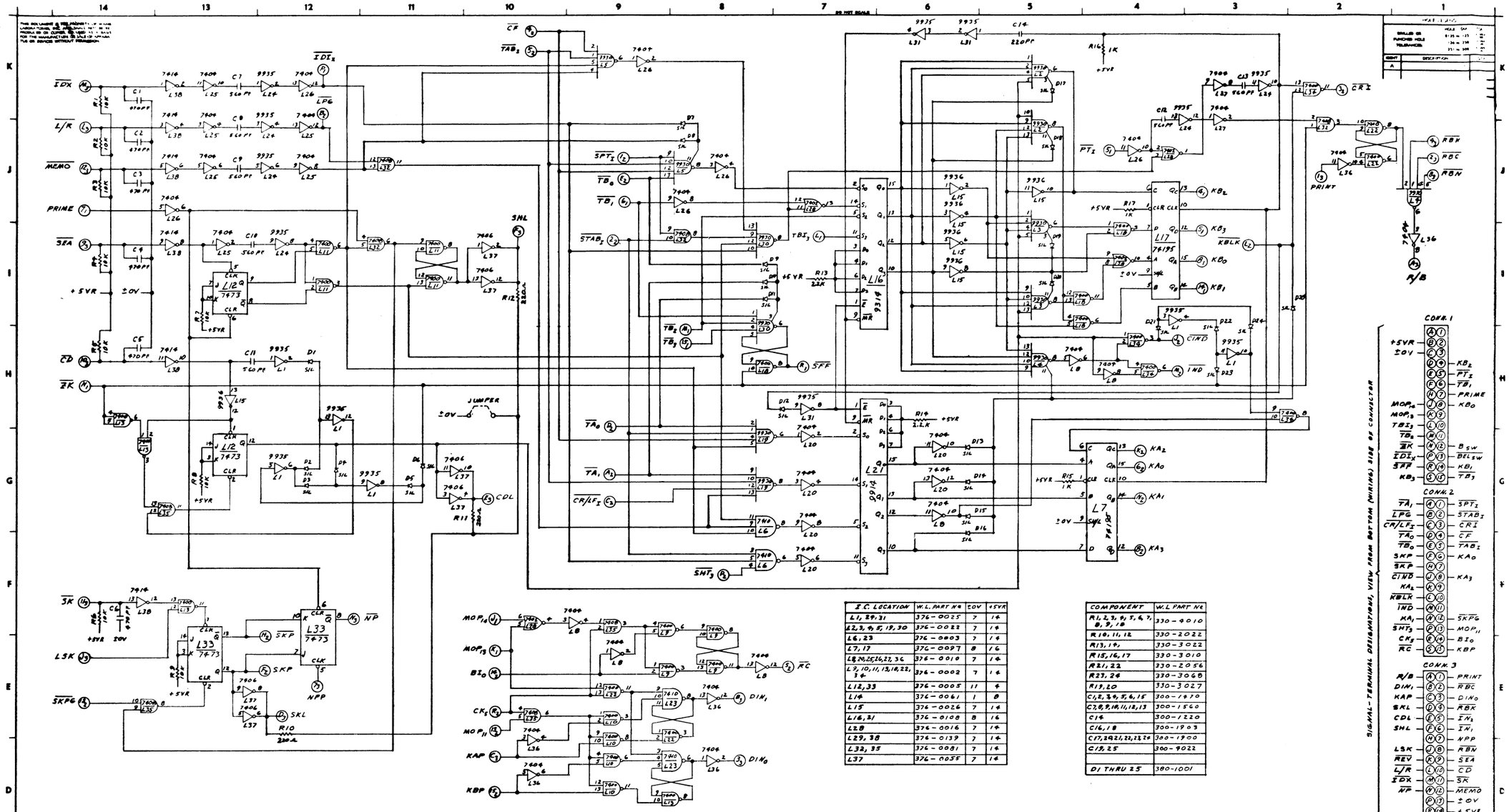

I.C. LOCATION	W.L. PART NO	±0V	+5VR
L1, 29, 31	376-0025	7	14
L2, 3, 4, 5, 19, 30	376-0022	7	14
L6, 23	376-0003	7	14
L7, 17	376-0097	8	16
L8, 9, 25, 26, 27, 36	376-0010	7	14
L9, 10, 11, 13, 18, 22, 34	376-0002	7	14
L12, 33	376-0005	11	4
L14	376-0061	1	8
L15	376-0026	7	14
L16, 21	376-0108	8	16
L28	376-0016	7	14
L29, 38	376-0139	7	14
L32, 35	376-0081	7	14
L37	376-0035	7	14

COMPONENT	W.L PART NO
R1, 2, 3, 4, 5, 6, 7, 8, 9, 18	330-4010
R10, 11, 12	330-2022
R13, 14	330-3022
R15, 16, 17	330-3010
R21, 22	330-2056
R23, 24	330-3068
R19, 20	330-3027
C1, 2, 3, 4, 5, 6, 15	300-1470
C7, 8, 9, 10, 11, 12, 13	300-1560
C14	300-1220
C16, 18	300-1903
C17, 20, 21, 22, 23, 24	300-1900
C19, 25	300-9022
D1 THRU 25	380-1001

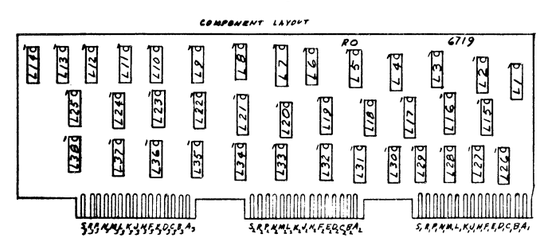

WANG PART NO	ITEM	QTY	NAME	MATERIAL	DESCRIPTION
			WANG LABORATORIES, INC. TEWKSBURY MASS. U.S.A.	BY / DATE	APPROVED BY / DATE
				DWN.	ENGR
				CHK.	MGR
			MATERIAL	MODEL NO 1222	E.C. CONTROL / MFG ENGR
				SEE ENGRG SPECIFICATIONS No.	TITLE SCHEMATIC LOGIBLOC TELECOMUNICATION
			FINISH	TOL. EX. AS NOTED XX ± .010 FRAC ± 1/64 XXX ± .005 ANG ± 1°30' FINISH 125	210-6719 / E / 6719 / C
			SCALE	SHT 4 OF 6	WANG PART NUMBER / SIZE / DRAWING NUMBER / REV

E-REV

THIS DOCUMENT IS THE PROPERTY OF WANG LABORATORIES, INC. AND SHALL NOT BE REPRODUCED OR COPIED OR USED AS A BASIS FOR THE MANUFACTURE OR SALE OF APPARATUS OR SERVICES WITHOUT PERMISSION.

DO NOT SCALE

LOCATION	W.L. PART NO.	TERMINAL ±0V	TERMINAL +5VR
L1,16,63	376-0035	7	14
L2,13,41,42	376-0051	7	14
L3,4,5,6	376-0075	10	5
L7	376-0053	8	16
L8,14,30,36	376-0010	7	14
L9,10,38,53	376-0014	8	16
L11,26	376-0059	7	14
L12	376-0031	7	14
L15	376-0011	10	5
L17,19,35,47	376-0014	8	16
L18	376-0013	7	14
L20,22,29,33,39, 41,42,54,55	376-0051	7	14
L21,27,31,34,37, 46,48,56,58	376-0002	7	14
L23,24	376-0032	7	14
L25	376-0026	7	14
L32,43,59	376-0003	7	14
L43,57	376-0036	8	16

LOCATION	W.L. PART NO.	TERMINAL ±0V	TERMINAL +5VR
L44,61	376-0056	7	14
L45	376-0026	7	14
L52	376-0118	8	16
L60	376-0059	7	14
L64	376-0056	11	4
L40	376-0059	14	7
J1	376-0035		
J2	654-1172		
L25,32	376-0093	7	14

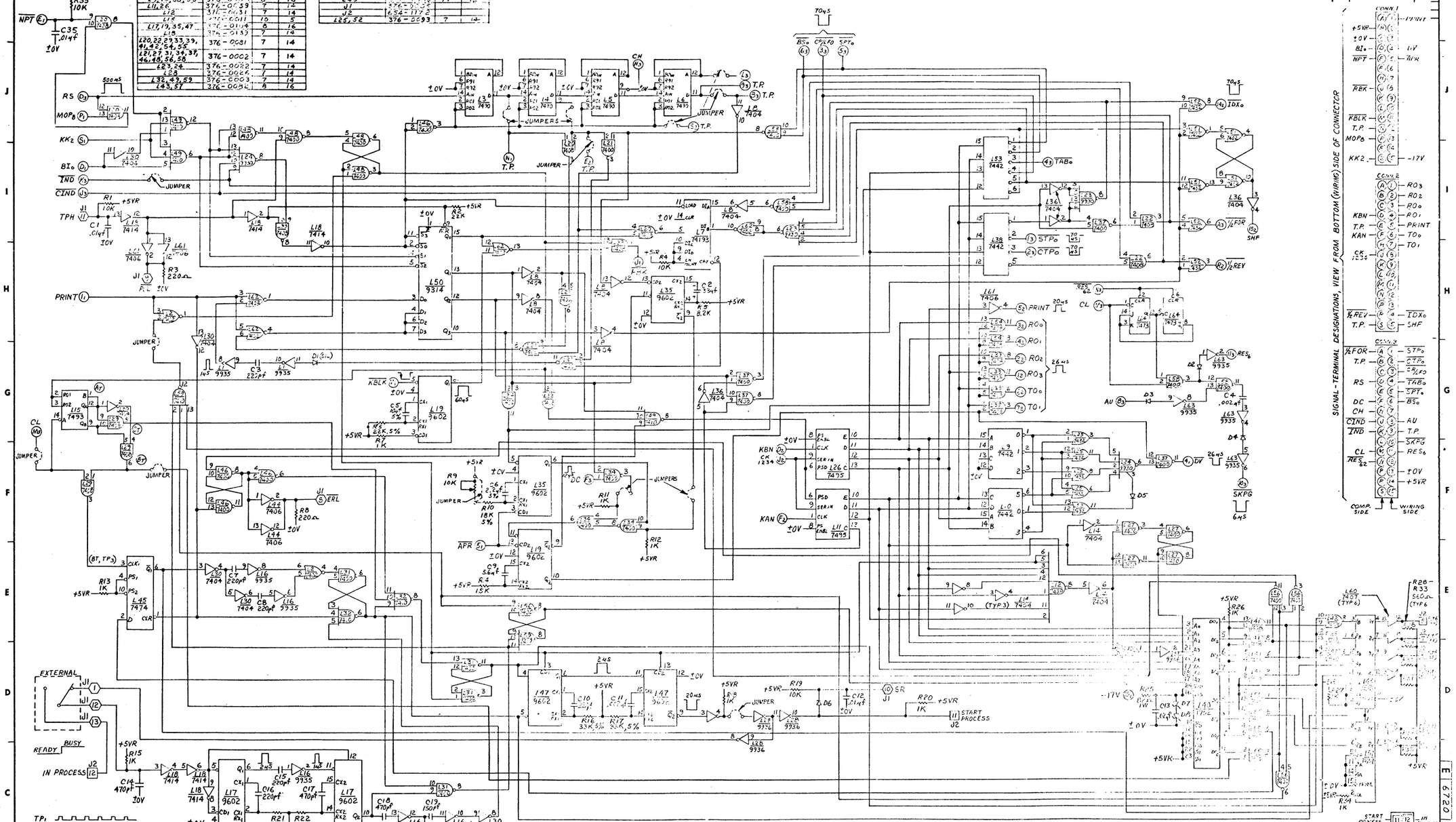

COMPONENT	W.L. PART NO.
R2	330-4022
D1-6	340-1000
D8	340-2051
D7	340-6047
R1,4,19,35	330-4010
R2,7	330-4022
R5,8	330-2002
R3	330-3042
R6,22	330-4023
R7,11,13,15,16,20, 23,24,26,27,34	330-3010
R9	336-1010
R10	330-4013
R14	330-4015
R16,17,21	330-4034
R25	332-1002
C1,2,35	300-1903
C2	300-4019
C13,20-32	300-1904
C10,11	300-1913
C3	300-4041
C6	300-4023
C3,7,8,10,15,16	300-1820
C9	300-4029
C14,17,18	300-1470
C19	300-1150
C20-34	[illegible]

WANG PART NO.	ITEM	QTY	NAME

WANG LABORATORIES, INC. TEWKSBURY MASS. U.S.A.

MATERIAL: MODEL NO 1222

SEE ENGRG SPECIFICATIONS

FINISH

TOL EX. AS NOTED

MATERIAL	DESCRIPTION		
	BY	DATE	APPROVED BY	DATE
DWN		4/75	ENGR	
CHK			MENGR	
E.C. CONTROL			MFG ENGR	

TITLE: SCHEMATIC LOGIBLOC TYPEWRITER OUTPUT TIMING WITH PAPER TAPE PUNCH OUT

210-6720 | E | 6720 | 1

E REV 2

THIS DOCUMENT IS THE PROPERTY OF WANG LABORATORIES, INC AND SHALL NOT BE RE PRODUCED OR COPIED OR USED AS A BASIS FOR THE MANUFACTURE OR SALE OF APPARATUS OR DEVICES WITHOUT PERMISSION

DO NOT SCALE

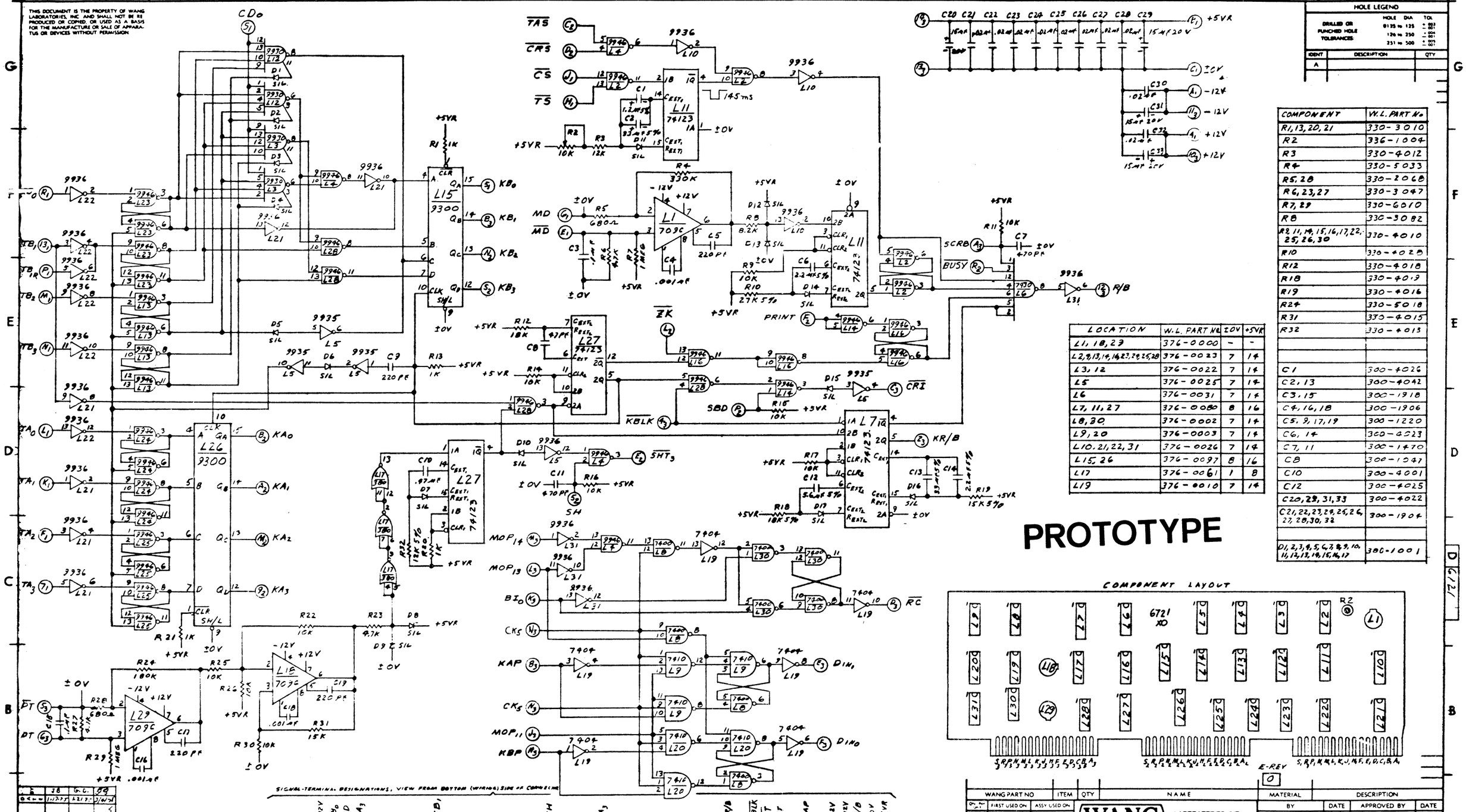

HOLE LEGEND		
DRILLED OR PUNCHED HOLE TOLERANCES	HOLE DIA	TOL
	0.125 to .125	+.002 −.001
	.126 to .250	+.004 −.001
	.251 to .500	+.005 −.001

IDENT	DESCRIPTION	QTY
A		

COMPONENT	W.L. PART No
R1, 13, 20, 21	330-3010
R2	336-1004
R3	330-4012
R4	330-5033
R5, 28	330-2068
R6, 23, 27	330-3047
R7, 29	330-6010
R8	330-3082
R9, 11, 14, 15, 16, 17, 22, 25, 26, 30	330-4010
R10	330-4028
R12	330-4018
R18	330-4019
R19	330-4016
R24	330-5018
R31	330-4015
R32	330-4013
C1	300-4026
C2, 13	300-4042
C3, 15	300-1918
C4, 16, 18	300-1906
C5, 9, 17, 19	300-1220
C6, 14	300-4023
C7, 11	300-1470
C8	300-1041
C10	300-4001
C12	300-4025
C20, 29, 31, 33	300-4022
C21, 22, 23, 24, 25, 26, 27, 28, 30, 32	300-1904
D1, 2, 3, 4, 5, 6, 7, 8, 9, 10, 11, 12, 13, 14, 15, 16, 17	300-1001

LOCATION	W.L. PART No	IOV	+5VR
L1, 18, 23	376-0000	-	-
L2, 9, 13, 14, 16, 23, 24, 25, 28	376-0023	7	14
L3, 12	376-0022	7	14
L5	376-0025	7	14
L6	376-0031	7	14
L7, 11, 27	376-0080	8	16
L8, 30	376-0002	7	14
L9, 20	376-0003	7	14
L10, 21, 22, 31	376-0026	7	14
L15, 26	376-0097	8	16
L17	376-0061	1	8
L19	376-0010	7	14

REV	DATE	BY	DESCRIPTION
A	11-17-73	DCE	ORIG
B	12-21-73	RFA	ADD
C	3/8/74	RFA	ADD

WANG PART NO	ITEM	QTY	NAME	MATERIAL	DESCRIPTION
On Par	FIRST USED ON	ASSY USED ON			

WANG LABORATORIES, INC. TEWKSBURY, MASS. U.S.A.

	BY	DATE	APPROVED BY	DATE
DWN		11/19/73	E ENGR	
CHK		11-20-73	M ENGR	
	E C CONTROL		MFG ENGR	

MATERIAL

FINISH

MODEL NO 1200

SEE ENGRG SPECIFICATIONS No

TOL EX AS NOTED XX ± .010 FRAC ± 1/64 XXX ± .005 ANG ± 1°30' FINISH 125

SCALE | SHT 4 OF 6

TITLE SCHEMATIC LOGIBLOC TELECOMMUNICATIONS

WANG PART NUMBER	SIZE	DRAWING NUMBER	REV
210-6721	D	6721	C

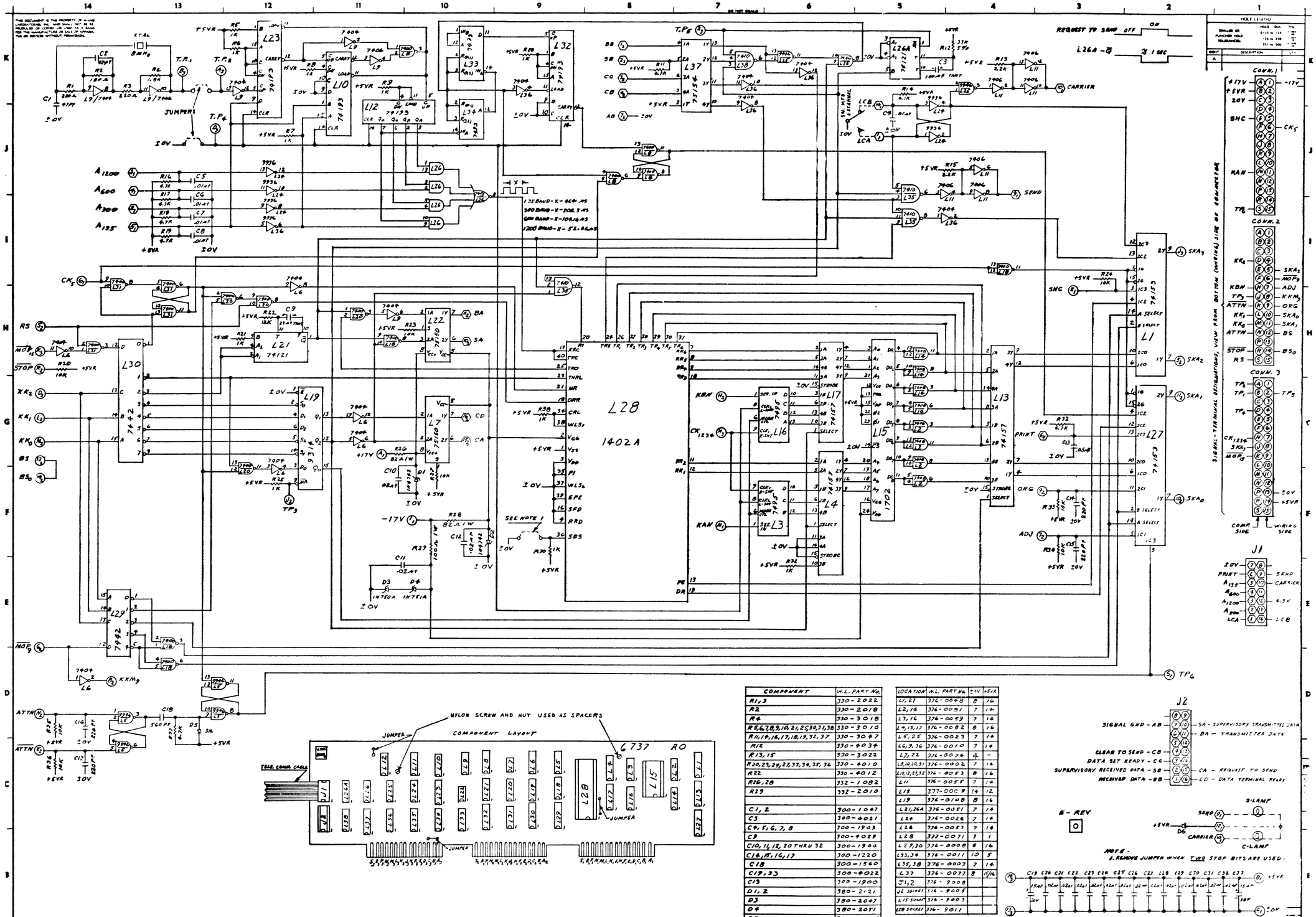

COMPONENT	W.L. PART No.
R1,3	330-2022
R2	330-2018
R4	330-3018
R5,6,7,8,9,10,21,25,30,31,38	330-3010
R11,14,16,17,18,19,32,37	330-3047
R12	330-9034
R13,15	330-3022
R20,23,24,27,33,34,35,36	330-4010
R22	330-4012
R26,28	332-1082
R29	332-2010
C1, 2	300-1047
C3	380-4021
C4, 5, 6, 7, 8	300-1903
C9	300-4029
C10, 11, 12, 20 THRU 32	300-1904
C14, 15, 16, 17	300-1220
C18	300-1560
C19, 33	300-4022
C13	300-1900
D1, 2	380-2121
D3	380-2047
D4	380-2051
D5	380-100168
D6	380-1004
XTAL 8MHz	321-0009
J1 16 PIN TELE. COMM. CABLE	220-0114

LOCATION	W.L. PART No.	+5V	+5VR
L1, 27	376-0048	8	16
L2, 14	376-0091	7	14
L3, 16	376-0059	7	14
L4, 13, 17	376-0082	8	16
L5, 25	376-0023	7	14
L6, 9, 36	376-0010	7	14
L7, 22	376-0076	4	–
L8, 18, 19, 31	376-0002	7	14
L10, 12, 23, 32	376-0053	8	16
L11	376-0055	7	14
L15	377-0009	14	12
L19	376-0108	8	16
L21, 26A	376-0051	7	14
L22	376-0026	7	14
L28	376-0057	7	14
L28	377-0071	3	1
L29, 30	376-0008	8	16
L33, 34	376-0011	10	5
L35, 38	376-0007	7	14
L37	376-0077	8	16/14
J1, 2	376-9008		
J2 SOCKET	376-9005		
L15 SOCKET	376-9003		
L28 SOCKET	376-9011		

J2

- SIGNAL GND – AB
- SA – SUPERVISORY TRANSMITTED DATA
- BA – TRANSMITTER DATA
- CLEAR TO SEND – CB
- DATA SET READY – CC
- SUPERVISORY RECEIVED DATA – SB
- CA – REQUEST TO SEND
- RECEIVED DATA – BB
- CD – DATA TERMINAL READY

E – REV

3-LAMP: SEND, CARRIER, +5VR, D6

C-LAMP

NOTE:
1. REMOVE JUMPER WHEN TWO STOP BITS ARE USED.

C19 C20 C21 C22 C23 C24 C25 C26 C27 C28 C29 C30 C31 C32 C33 — +5VR, 0V

WANG PART NO.	ITEM	QTY	NAME	MATERIAL	DESCRIPTION
REV	FIRST USED ON	ASSY USED ON			

WANG LABORATORIES, INC. TEWKSBURY, MASS. U.S.A.

MODEL NO. 1220/1222

TITLE: SCHEMATIC, LOGIBLOC TELECOMMUNICATIONS BOARD

210-6737 | E | 6737 | 0

SCALE: SHT 1 OF 1

THIS DOCUMENT IS THE PROPERTY OF WANG LABORATORIES, INC. AND SHALL NOT BE RE-PRODUCED OR COPIED OR USED AS A BASIS FOR THE MANUFACTURE OR SALE OF APPARATUS OR DEVICES WITHOUT PERMISSION

DO NOT SCALE

HOLE LEGEND			
DRILLED OR PUNCHED HOLE TOLERANCES	HOLE DIA.	TOL.	
	0-125 to 125	±.003	
	.126 to 250	±.004	
	.251 to .500	±.005	
IDENT	DESCRIPTION	QTY.	
A			

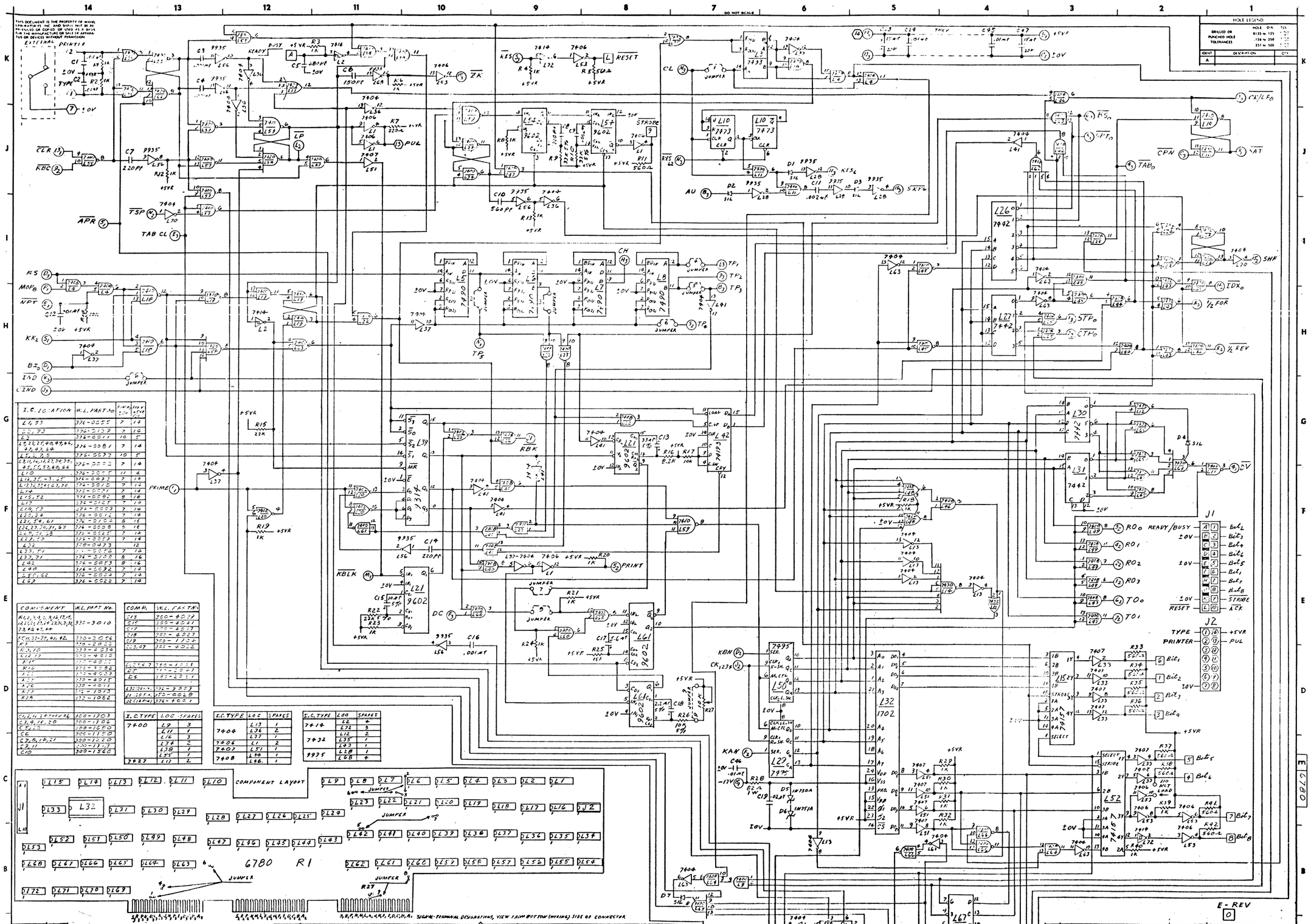

I.C. LOCATION	W.L. PART NO.	PIN A (GND)	PIN B (+5V)
L4, 53	376-0055	7	14
L5, 72	376-0057	7	14
L6	376-0011	10	5
L9, 23, 25, 90, 93, 96, 83, 85, 68	376-0081	7	14
L5, 6, 75	376-0073	10	5
L8, 11, 16, 17, 22, 39, 70, 85, 87, 89, 60, 66	376-0002	7	14
L10	376-0005	11	6
L14, 37, 43, 45	376-0093	7	14
L19, 32, 34, 63, 70	376-0015	7	14
L24	376-0097	7	14
L15, 52	376-0081	8	16
L17	376-0125	7	14
L18, 59	376-0003	7	14
L25, 69	376-0011	7	14
L31, 54, 61	376-0102	8	16
L26, 27, 30, 31, 67	376-0008	8	16
L29, 35, 65	376-0025	7	14
L33, 73	376-0053	7	14
L36	378-0073		12
L38, 71	376-0056	7	14
L39, 71	376-0102	8	16
L42	376-0053	8	16
L49	376-0032	7	14
L50, 62	376-0024	7	14
L52	376-0022	7	14

COMPONENT	W.L. PART NO.
R1, 2, 3, 4, 5, 8, 12, 13, 14, 15, 17, 18, 19, 20, 21, 22, 23, 24, 28, 29, 30, 31, 32, 33, 34	335-3010
R6, 11, 25-28, 41, 42	330-3056
R7	335-2033
R9, 10	330-4334
R16, 17	333-4510
R31	333-4015
R36	333-7832
R37	333-4023
R39	333-4015
R40	333-4011
R41	335-1073
R42	333-1062
C1, 2, 4, 5, 7, 14-16, 36	300-1703
C3, 9, 12, 20	300-1102
C8, 22	300-1600
C6	300-1150
C7, 8, 17, 21	300-1220
C9, 11	300-1313
C10	300-1360

COMP.	W.L. PART NO.
C13	300-4019
C15	300-4041
C17	300-4017
C18	300-4037
C19	300-1134
C23, 37	300-4012
C5	300-1031
C7	300-1047
C8	300-2011
L32, 34, 36	302-7303
U1 (SER.)	370-0028
U2 (PAR.)	376-1001

I.C. TYPE	LOC	SPARES
7400	L9	3
	L11	1
	L16	3
	L28	2
	L38	1
	L55	1
7427	L17	2

I.C. TYPE	LOC	SPARES
7404	L13	1
	L36	2
	L37	1
7406	L1	2
7402	L51	1
7408	L48	1
	L46	1

I.C. TYPE	LOC	SPARES
7414	L2	4
	L72	3
	L12	2
7432	L35	1
	L43	1
9375	L28	1
	L68	4

QTY	NAME	MATERIAL	DESCRIPTION
WANG LABORATORIES, INC. TEWKSBURY MASS. U.S.A.		BY / DATE	APPROVED BY / DATE
		DWN	E ENGR
		CHK	M ENGR
MATERIAL	MODEL NO. 1222 / LPO	E C CONTROL	MFG ENGR
	SEE ENGRG SPECIFICATIONS No.	TITLE SCHEMATIC, LOGIBLOC OUTPUT CONTROLLER FOR 1222 + LPO	
FINISH	TOL. EX. AS NOTED XX ± .010 FRAC ± 1/64 XXX ± .005 ANG. ± 1°30' FINISH	210-6780	E 6780 1
SCALE	SHT. 1 OF 1	WANG PART NUMBER	SIZE / DRAWING NUMBER / REV.

E-REV 0

THIS DOCUMENT IS THE PROPERTY OF WANG LABORATORIES, INC. AND SHALL NOT BE BE PRODUCED OR COPIED OR USED AS A BASIS FOR THE MANUFACTURE OR SALE OF APPARATUS OR DEVICES WITHOUT PERMISSION

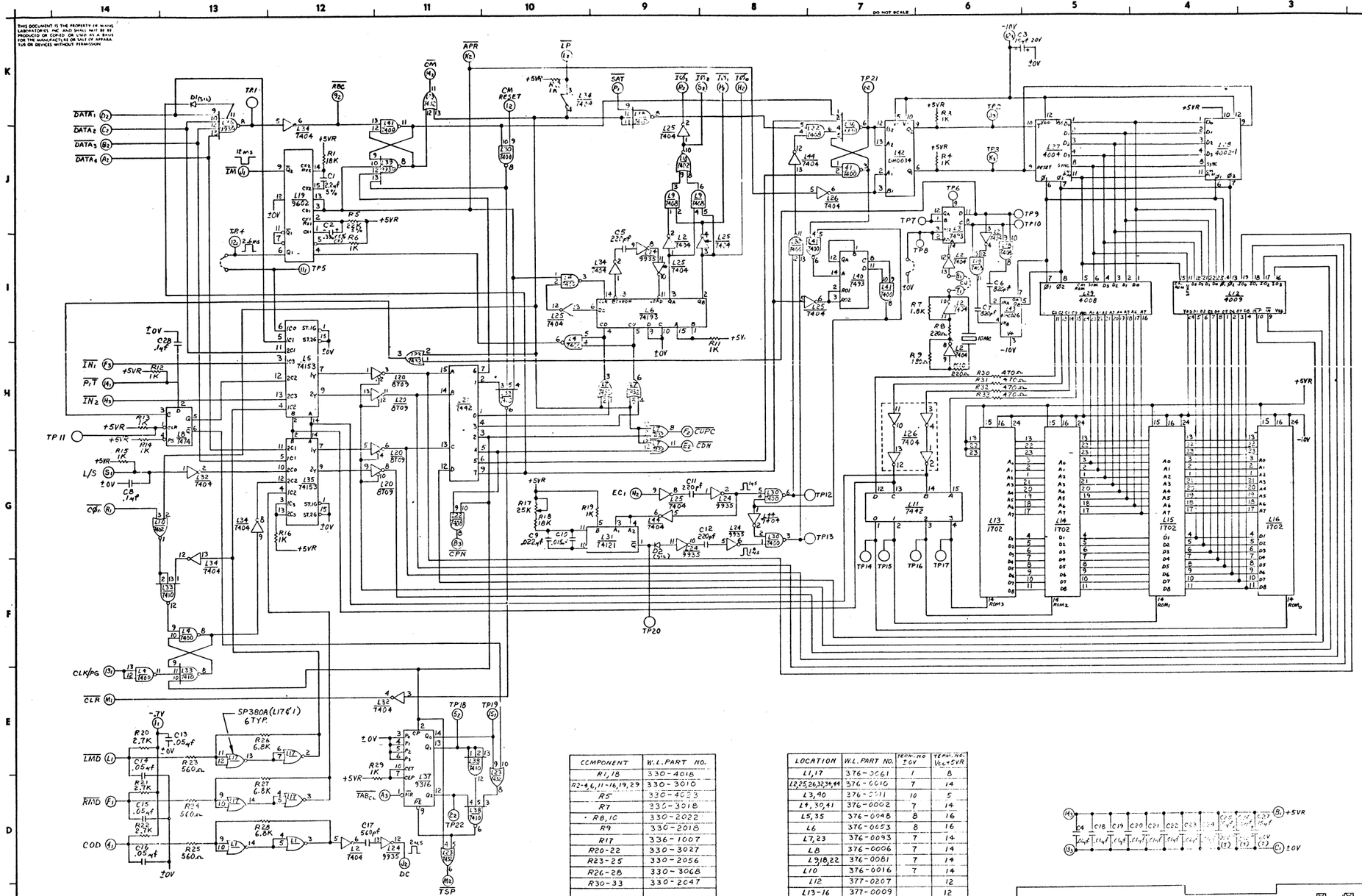

HOLE LEGEND		
DRILLED OR PUNCHED HOLE TOLERANCES	HOLE DIA	TOL
	.0135 to .125	±.003
	.126 to .250	±.004
	.251 to .500	±.005

IDENT	DESCRIPTION	QTY
A		

SIGNAL-TERMINAL DESIGNATIONS, VIEW FROM BOTTOM (WIRING) SIDE OF CONNECTOR

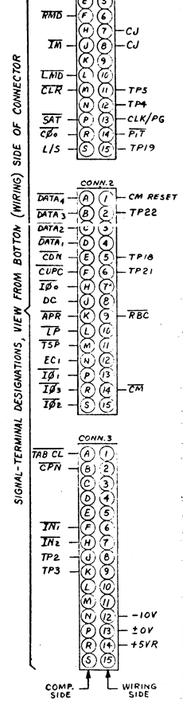

SPARES	
TYPE	LOCATION
SP380A	L1-2
7474	L8-1
7408	L9-1, 18-2, 22-2
7402	L14-2
935	L24-1
7404	L32-1, 35-6, 38-1, 44-3
930	L37-1

COMPONENT	W.L. PART NO.
R1, 18	330-4018
R2-4, 6, 11-16, 19, 29	330-3010
R5	330-4023
R7	330-3018
R8, 10	330-2022
R9	330-2018
R17	336-1007
R20-22	330-3027
R23-25	330-2056
R26-28	330-3068
R30-33	330-2047
XTAL	321-0008
C1	300-4027
C2	300-4043
C3, 26, 27, 25	300-4022
C13, 14, 15, 16	300-1900
C5, 11, 12	300-1220
C6, 7	300-1820
C8, 28	300-1901
C9	300-1927
C10	300-1928
C17	300-1560
C4, C18-24	300-1903
D1, 2	380-1001

LOCATION	W.L. PART NO.	TERM. NO. ±0V	TERM. NO. VCC+5VR
L1, 17	376-0061	1	8
L2, 25, 26, 32, 34, 44	376-0010	7	14
L3, 40	376-0011	10	5
L4, 30, 41	376-0002	7	14
L5, 35	376-0048	8	16
L6	376-0053	8	16
L7, 23	376-0093	7	14
L8	376-0006	7	14
L9, 18, 22	376-0081	7	14
L10	376-0016	7	14
L12	377-0207		12
L13-16	377-0009		12
L33, 38	376-0003	7	14
L19	376-0104	8	16
L20	376-0078	7	14
L11, 21	376-0008	8	16
L24	376-0025	7	14
L27	377-0206		5
L28	377-0205		5
L29	377-0208		12
L31	376-0051	7	14
L36, 39	376-0022	7	14
L37	376-0094	8	16
L42	376-0115	7	14
L43	376-0114		6

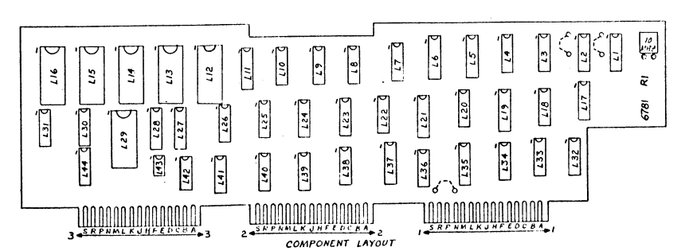

E-REV 0

REVISION			
		4-8-75	DETS
	ECO PER E-304		
	ECO PER		
	ECO PER MR-1331		
	INIT.		

WANG PART NO	ITEM	QTY	NAME
			WANG LABORATORIES, INC. TEWKSBURY MASS. U.S.A.
			MODEL NO 1222
			SE ENGRG SPECIFICATIONS NO.
			TOL EX AS NOTED .XX ± .010 .XXX ± .005 .XXX ± .005 ANG ± 1°30' FINISH

MATERIAL	DESCRIPTION

BY	DATE	APPROVED BY	DATE
DWN		E ENGR	
CHK		M ENGR	
E CONTROL		MFG ENGR	

TITLE SCHEMATIC LOGIBLOC MICROPROCESSOR FOR 1222 & LPD

SIZE	DRAWING NUMBER	REV
E	6781	1

THIS DOCUMENT IS THE PROPERTY OF WANG LABORATORIES, INC. AND SHALL NOT BE REPRODUCED OR COPIED, OR USED AS A BASIS FOR THE MANUFACTURE OR SALE OF APPARATUS OR DEVICES WITHOUT PERMISSION.

DO NOT SCALE

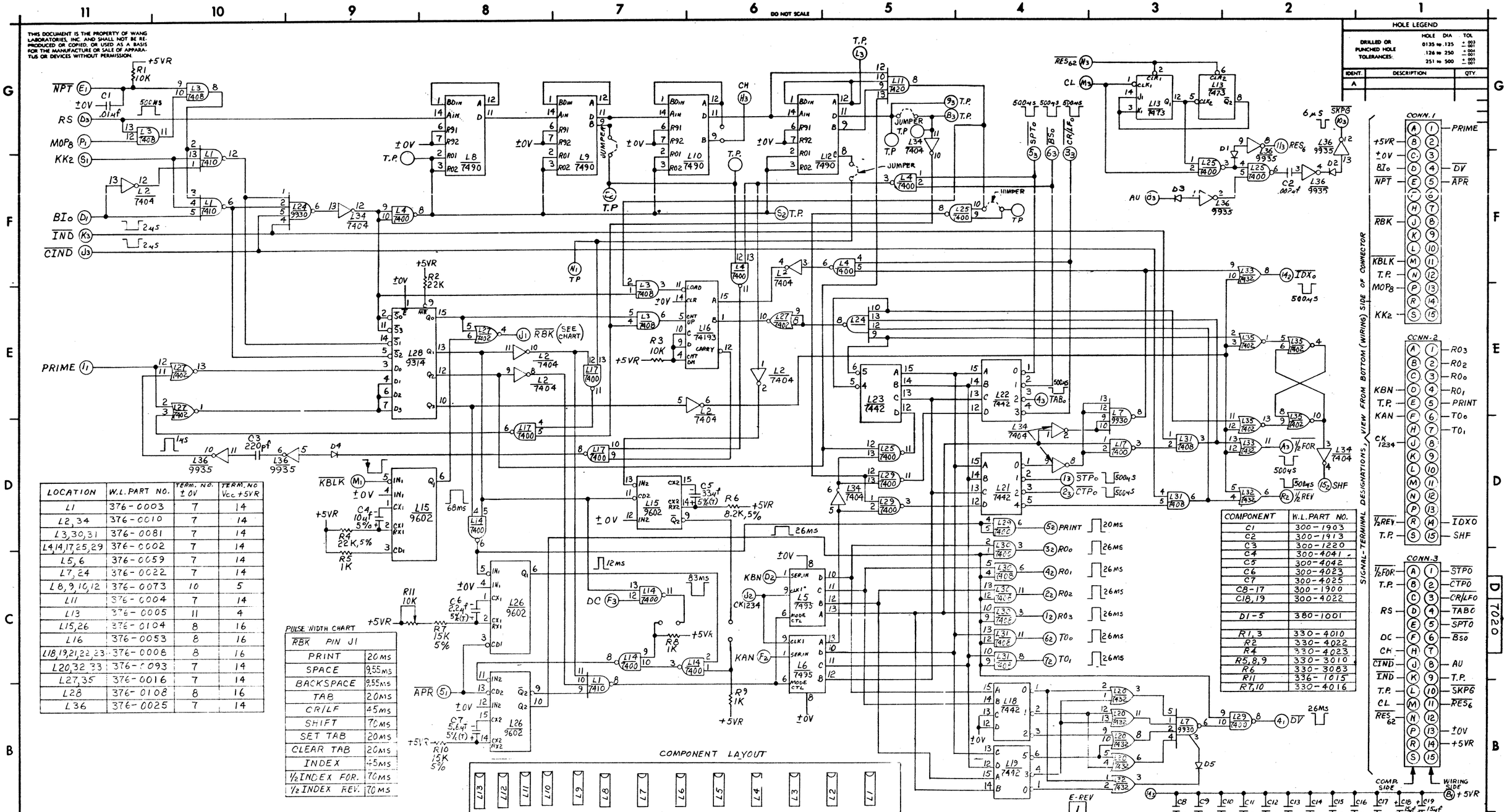

LOCATION	W.L. PART NO.	TERM. NO. ±0V	TERM. NO. Vcc +5VR
L1	376-0003	7	14
L2, 34	376-0010	7	14
L3, 30, 31	376-0081	7	14
L4, 14, 17, 25, 29	376-0002	7	14
L5, 6	376-0059	7	14
L7, 24	376-0022	7	14
L8, 9, 10, 12	376-0073	10	5
L11	376-0004	7	14
L13	376-0005	11	4
L15, 26	376-0104	8	16
L16	376-0053	8	16
L18, 19, 21, 22, 23	376-0008	8	16
L20, 32, 33	376-0093	7	14
L27, 35	376-0016	7	14
L28	376-0108	8	16
L36	376-0025	7	14

PULSE WIDTH CHART

RBK PIN J1	
PRINT	20ms
SPACE	9.55ms
BACKSPACE	9.55ms
TAB	20ms
CR/LF	45ms
SHIFT	70ms
SET TAB	20ms
CLEAR TAB	20ms
INDEX	45ms
1/2 INDEX FOR.	70ms
1/2 INDEX REV.	70ms

COMPONENT	W.L. PART NO.
C1	300-1903
C2	300-1913
C3	300-1220
C4	300-4041
C5	300-4042
C6	300-4023
C7	300-4025
C8-17	300-1900
C18, 19	300-4022
D1-5	380-1001
R1, 3	330-4010
R2	330-4022
R4	330-4023
R5, 8, 9	330-3010
R6	330-3083
R11	336-1015
R7, 10	330-4016

HOLE LEGEND

DRILLED OR PUNCHED HOLE TOLERANCES:	HOLE DIA	TOL
	.0135 to .125	±.003 ±.001
	.126 to .250	±.004 ±.001
	.251 to .500	±.005 ±.001

IDENT.	DESCRIPTION	QTY.
A		

REVISION	BY	DATE
A	ORIG. PER DWR-E 016 APP'D: DTT	2-10-75
B	REV. PER ECN-5081 APP'D:	10-2-75

WANG PART NO	ITEM	QTY.	NAME	MATERIAL	DESCRIPTION
Qty. Per Unit / First Used On / Assy Used On					

WANG LABORATORIES, INC. TEWKSBURY, MASS. U.S.A.

	BY	DATE	APPROVED BY	DATE
DWN	AK	8-5-75	E ENGR	9-16-75
CHK	G.D.	8-16-75	M ENGR	
E. C. CONTROL			MFG ENGR	

MATERIAL

MODEL NO. 1222

SEE ENGRG SPECIFICATIONS No.

FINISH

TOL. EX. AS NOTED .XX ± .010 FRAC. ± 1/64 .XXX ± .005 ANG. ± 1°30' FINISH 125

SCALE 1/1 SHT 4 OF 5

TITLE SCHEMATIC LOGIBLOC TELECOMMUNICATIONS TYPEWRITER OUTPUT TIMING

WANG PART NUMBER	SIZE	DRAWING NUMBER	REV.
210-7020	D	7020	1

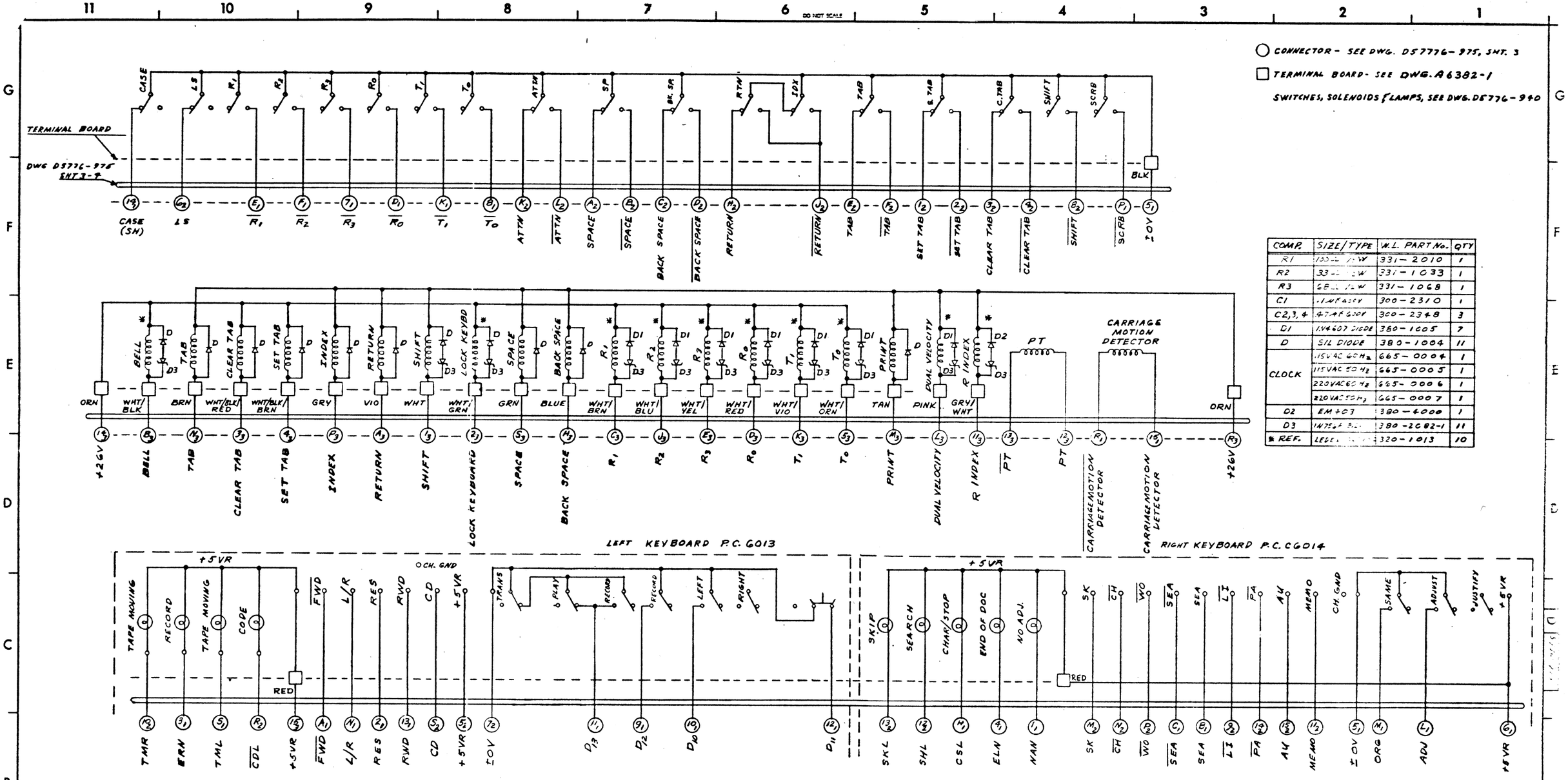

COMP.	SIZE/TYPE	W.L. PART No.	QTY
R1	100Ω ½W	331-2010	1
R2	33Ω ½W	331-1033	1
R3	68Ω ½W	331-1068	1
C1	.1μF 600V	300-2310	1
C2,3,4	.47μF 600V	300-2348	3
D1	1N4607 DIODE	380-1005	7
D	SIL DIODE	380-1004	11
CLOCK	115VAC 60Hz	665-0004	1
	115VAC 50Hz	665-0005	1
	220VAC 60Hz	665-0006	1
	220VAC 50Hz	665-0007	1
D2	EM403	380-4000	1
D3	1N754A ZENER	380-2682-1	11
* REF.	LEGEND	320-1013	10

SHEETS 2 & 3 ARE "D" SIZE
SHEET 4 OF 4 IS "E" SIZE

REV.	REVISION	BY	DATE
1	PER ECN 2979 ADDED RESISTOR AND CAP ACROSS AC INPUT APP: SKH	CG	6-19-72
2	REVISED PER ECN #3156 APP: B SKH	CG	8-22-72
3	REVISED PER ECN #3322 APP: D SKH	BB	2-8-73
4	REVISED PER ECN #3514 APP: D SKH	BB	3-8-73
5	ECN #3631 ADDED: REVISION CHAR	AFM	5-18-73
6	REVISED PER ECN #3652 APP: D SKH	BB	6-18-73
7	REVISED PER ECN #3661 APP: D SKH	BB	6-18-73
8	REVISED PER ECN #3678 APP: D SKH	BB	6-18-73
9	REVISED PER ECN #3800 APP: D SKH	BB	2-28-74
10	REVISED: PER ECN #3830 APP: D. S.K.	F.S.S.	1-29-74
11	SEE SHEET 4 E SIZE	LET	2-27-74
12	REV. PER RFA 0902 7/17/74 MEM	CEC	7/17/74
13	REVISED PER ECN-4620 APP: D JSF	AK	[illegible]

WANG LABORATORIES INC.
TEWKSBURY, MASS.

MODEL NO. 1200	DRAWN		APP.
	CHECKED		APP.
TITLE SCHEMATIC, TYPEWRITER			
SHT 1 OF 4	DWG. NO. D 5776-975		REV.

DO NOT SCALE

CONN. 3

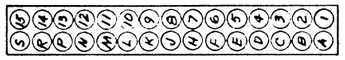

CONN. 2

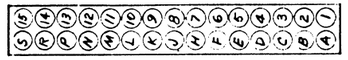

CONN. 1

CONN. #3

SIGNAL	WIRE COLOR OR NUMBER	6259 PIN NO.	WIRE SIZE	W.L. PART NO.	LENGTH
—	—	15	—	—	—
SPT_5	GREEN	5	#24	600-2005	5½'
+26V	ORANGE	14	#24	600-2003	5½'
+26V	ORANGE	R	#24	600-2003	5½'
$\overline{PT}$	LEFT COAX-BLK	13	—	—	—
$INDEX_5$	GRAY	P	#24	600-2008	5½'
PT	LEFT COAX-CLR	12	—	—	—
TAB_5	BROWN	N	#24	600-2001	5½'
IS	GRY/WHT	11	#22	600-1038	5½'
$PRINT_5$	TAN	M	#24	600-2011	5½'
±0V	LEFT COAX-SHLD	10	—	—	—
DVS	PINK	L	#24	600-2022	5½'
26 VAC	YELLOW	9	#18	600-0004	5½'
T_{015}	WHT/VIO	K	#24	600-2097	5½'
26 VAC	YELLOW	8	#18	600-0004	5½'
R_{025}	WHT/BLU	J	#24	600-2096	5½'
—	—	7	—	—	—
BS_5	BLUE	H	#24	600-2006	5½'
—	—	6	—	—	—
CH GND	GRN/YEL	F	#18	600-0054	5½'
T_{005}	WHT/ORN	5	#24	600-2093	5½'
R_{035}	WHT/YEL	E	#24	600-2094	5½'
SET TAB	WHT/BLK/BRN	4	#24	600-2901	5½'
R_{005}	WHT/RED	D	#24	600-2092	5½'
CLR TAB	WHT/BLK/RED	3	#24	600-2902	5½'
R_{015}	WHT/BRN	C	#24	600-2091	5½'
KBL_5	WHT/GRN	2	#24	600-2095	5½'
BEL_5	WHT/BLK	B	#24	600-2090	5½'
SHF_5	WHITE	1	#24	600-2009	5½'
CR5	VIOLET	A	#24	600-2007	5½'

CONN. #2

SIGNAL	WIRE COLOR OR NUMBER	6259 PIN NO.	WIRE SIZE	W.L. PART NO.	LENGTH
AU	R.KB. CABLE-6	15	—	—	—
CD	L.KB CABLE-5	5	—	—	—
$\overline{PA}$	R.KB CABLE-5	14	—	—	—
CDL	VIO/YEL	R	#24	600-2074	8½'
SKL	GRY/BRN	13	#24	600-2081	7½'
$\overline{WO}$	R.KB.CABLE-11	P	—	—	—
SHL	GRY/GRN	12	#24	600-2085	7½'
$\overline{CH}$	R.KB. CABLE-9	N	—	—	—
MEMO	R.KB. CABLE-8	11	—	—	—
SK	R.KB.CABLE-13	M	—	—	—
TMR	VIO/RED	10	#24	600-2072	8½'
$\overline{ATTN}$	MAIN CABLE-21	L	—	—	—
$\overline{LT}$	R.KB. CABLE-7	9	—	—	—
ATTN	MAIN CABLE-22	K	—	—	—
$\overline{SHP}$	MAIN CABLE-5	8	—	—	—
$\overline{CR/LFI}$	MAIN CABLE-19	J	—	—	—
±0V	L.KB. CABLE-1&2	7	—	—	—
CR/LFI	MAIN CABLE-20	H	—	—	—
L/S	MAIN CABLE-23	6	—	—	—
TABT	MAIN CABLE-13	F	—	—	—
+5VR	L.KB. CABLE-3&4	5	—	—	—
TABT	MAIN CABLE-14	E	—	—	—
$\overline{CPT}$	MAIN CABLE-3	4	—	—	—
$\overline{BK\ SPT}$	MAIN CABLE-17	D	—	—	—
CPT	MAIN CABLE-4	3	—	—	—
BK SPT	MAIN CABLE-18	C	—	—	—
$\overline{STAB}$	MAIN CABLE-1	2	—	—	—
$\overline{SPT}$	MAIN CABLE-15	B	—	—	—
STAB	MAIN CABLE-2	1	—	—	—
SPT	MAIN CABLE-16	A	—	—	—

CONN. #1

SIGNAL	WIRE COLOR OR NUMBER	6259 PIN NO.	WIRE SIZE	W.L. PART NO.	LENGTH
MD	RIGHT COAX-CLR	15	—	—	—
TML	VIO/ORN	5	#24	600-2073	8½'
SH	MAIN CABLE-24	14	—	—	—
$\overline{MD}$	RIGHT COAX-BLK	R	—	—	—
$\overline{RWD}$	L.KB. CABLE-8	13	—	—	—
SCRB	MAIN CABLE-6	P	—	—	—
D_{11}	L.KB. CABLE-12	12	—	—	—
L/R	L.KB. CABLE-7	N	—	—	—
D_{13}	L.KB. CABLE-11	11	—	—	—
ORG	R.KB. CABLE-14	M	—	—	—
D_{10}	L.KB. CABLE-9	10	—	—	—
ADJ	R.KB. CABLE-15	L	—	—	—
D_{12}	L.KB. CABLE-10	9	—	—	—
$\overline{T_{1I}}$	MAIN CABLE-9	K	—	—	—
$\overline{T_{0I}}$	MAIN CABLE-12	8	—	—	—
—	—	J	—	—	—
$\overline{R_{3I}}$	MAIN CABLE-8	7	—	—	—
CSL	GRY/RED	H	#24	600-2082	7½'
+5VR	R.KB. CABLE-1&2	6	—	—	—
$\overline{R_{2I}}$	MAIN CABLE-11	F	—	—	—
±0V	BLACK	5	#18	600-0000	5½"
$\overline{R_{1I}}$	MAIN CABLE-7	E	—	—	—
ELN	GRY/ORN	4	#24	600-2083	7½'
$\overline{R_{0I}}$	MAIN CABLE-10	D	—	—	—
ERN	VIO/GRN	3	#24	600-2075	8½'
$\overline{SEARCH}$	R.KB. CABLE-10	C	—	—	—
$\overline{RES}$	L.KB. CABLE-13	2	—	—	—
SEARCH	R.KB CABLE-12	B	—	—	—
NAN	GRY/YEL	1	#24	600-2084	7½'
$\overline{FWD}$	L.KB. CABLE-6	A	—	—	—

ALL WIRE LEADS

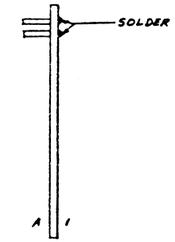

NOTE:-

1. SOLDER LEADS 25 & 26 MAIN CABLE, 3 & 4 RIGHT KEYBOARD CABLE, BLACK LEAD 5, AND RIGHT COAX SHIELD TO TERMINAL.
2. AFTER ALL LEADS ARE SOLDERED TO THE FINGER BOARD AND THE ASSEMBLY HAS BEEN INSPECTED, TIE THE LEADS 3' FROM POINT "X" THEN ADD TWO ONE FOOT PIECES OF 3/16 TUBING AS FOLLOWS. ONE SIDE ALL GRAY WITH TRACER, RIGHT KEYBOARD CABLE AND 30 CONDUCTOR MAIN CABLE. ALL REMAINING LEADS GO INTO THE OTHER TUBING. OMIT BOTH COAX CABLES. TIE TO ABOUT 2" FROM END OF TUBING.
3. NUMBERED CABLE JACKET ENDS AT POINT "Y" RIGHT COAX JACKET AT POINT "Z"
4. FOLD BACK AND TIE UNUSED LEADS.
5. A TOLERANCE OF -1/4, +1/2 TO THE BREAKOUTS AND FANOUTS.

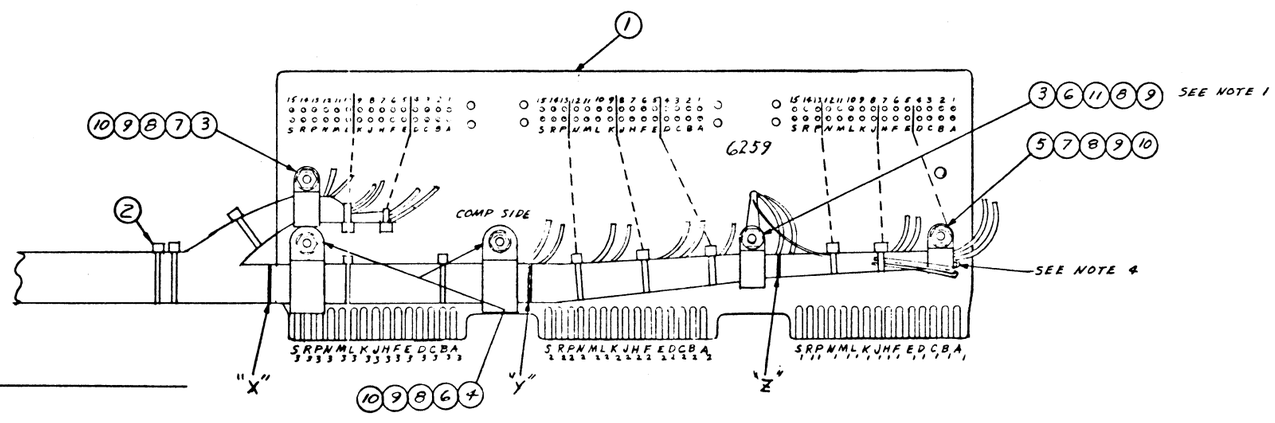

SEE NOTE 2 →

IDENT	QTY	NAME	W.L. PART NO.	DESCRIPTION
	2'	TUBING	605-0013	3/16" CLEAR
11	1	LUG	654-1006	#6 GND LUG
10	4	WASHER LOCK	653-3001	#6 INT. T.
9	5	NUT, SM. PAT.	652-3004	#6-32
8	5	WASHER FLAT	653-3000	#6
7	2	SCREW	650-3120	6-32 X 3/8
6	3	SCREW	650-3160	6-32 X 1/2
5	1	CLAMP	654-1252	1/4"
4	2	CLAMP	654-1257	9/16"
3	2	CLAMP	654-1254	3/8"
	A/R	SOLDER	660-0202	ALLOY 63-37
	A/R	WIPE (BLACK)	600-0000	#18 3" LONG
2	A/R	PAN-TY	605-1004	PLTIM-M
1	1	FINGER BOARD	510-6259	6259

Sheets 1 & 2 ARE "D" SIZE
SHEET 4 IS "E" SIZE

REV	DATE	REVISION
1	7-8-72	REDRAWN PER ECN #3201 APP'D.
5		ECN 3G-1 FOR REV. REFERE TO THIS ECN
6		REVISED PER ECN #3G61 APP'D.
10	7-26-74	REVISED PER ECN 3G-1 & ECN 3G-4 TO SHOW 4 WIRE APP'D.

SEE SHEET 1

WANG LABORATORIES INC.
TEWKSBURY, MASS.

MODEL NO. 1200 | DRAWN 7-5-72 | APP. | CHECKED 7/11/75 | APP.

TITLE C1, 2 AND 3 WIRING

SHT 3 OF 4 | DWG. NO. D 5776-975 | REV 13

THIS DOCUMENT IS THE PROPERTY OF WANG LABORATORIES, INC. AND SHALL NOT BE REPRODUCED OR COPIED, OR USED AS A BASIS FOR THE MANUFACTURE OR SALE OF APPARATUS OR DEVICES WITHOUT PERMISSION.

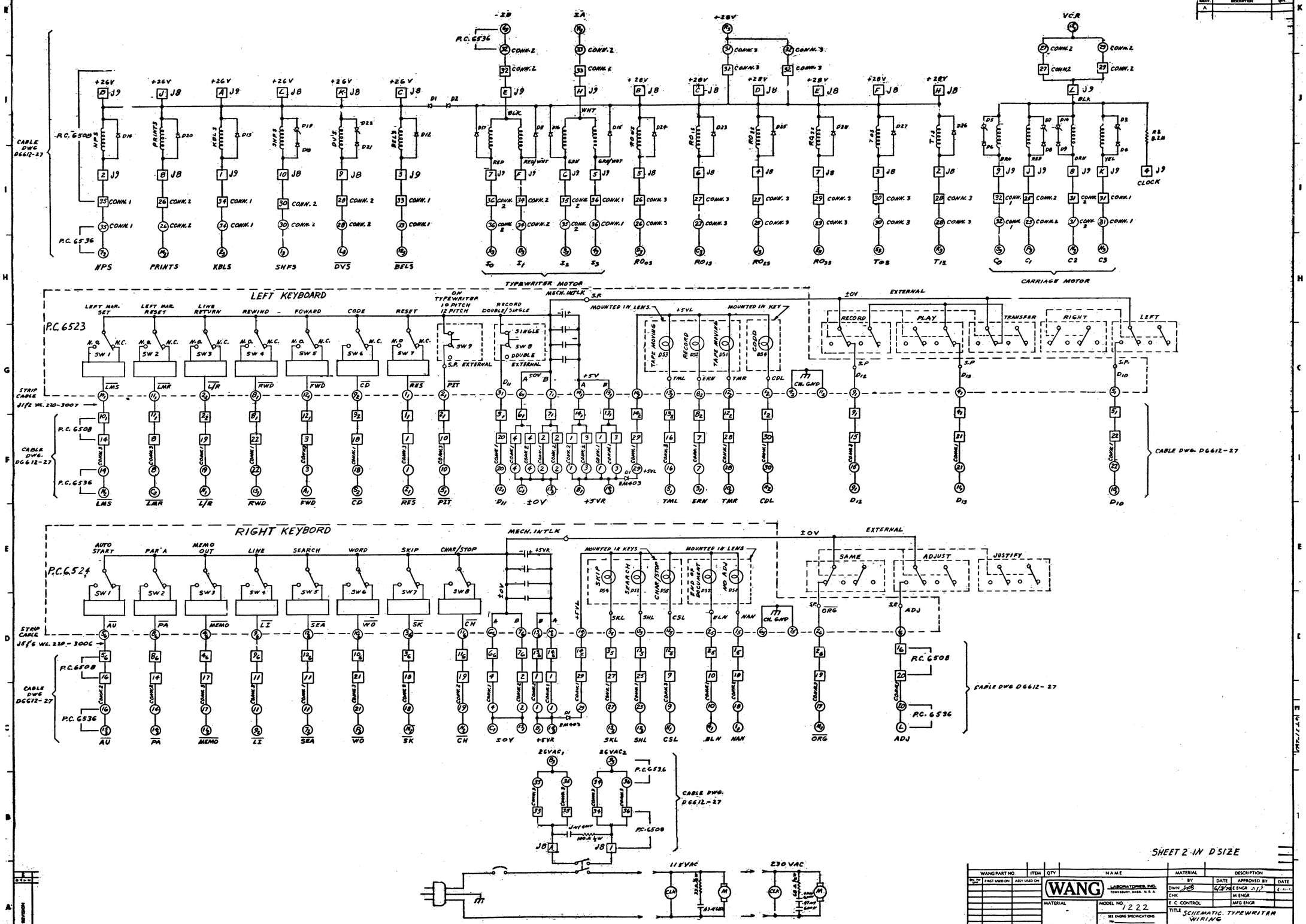

THIS DOCUMENT IS THE PROPERTY OF WANG LABORATORIES, INC. AND SHALL NOT BE REPRODUCED OR COPIED, OR USED AS A BASIS FOR THE MANUFACTURE OR SALE OF APPARATUS OR DEVICES WITHOUT PERMISSION.

DO NOT SCALE

HOLE LEGEND			
DRILLED OR PUNCHED HOLE TOLERANCES:	HOLE DIA	TOL	
	.0135 to .125	±.002 ±.001	
	.126 to .250	±.002 ±.001	
	.251 to .500	±.002 ±.001	

IDENT	DESCRIPTION	QTY
A		

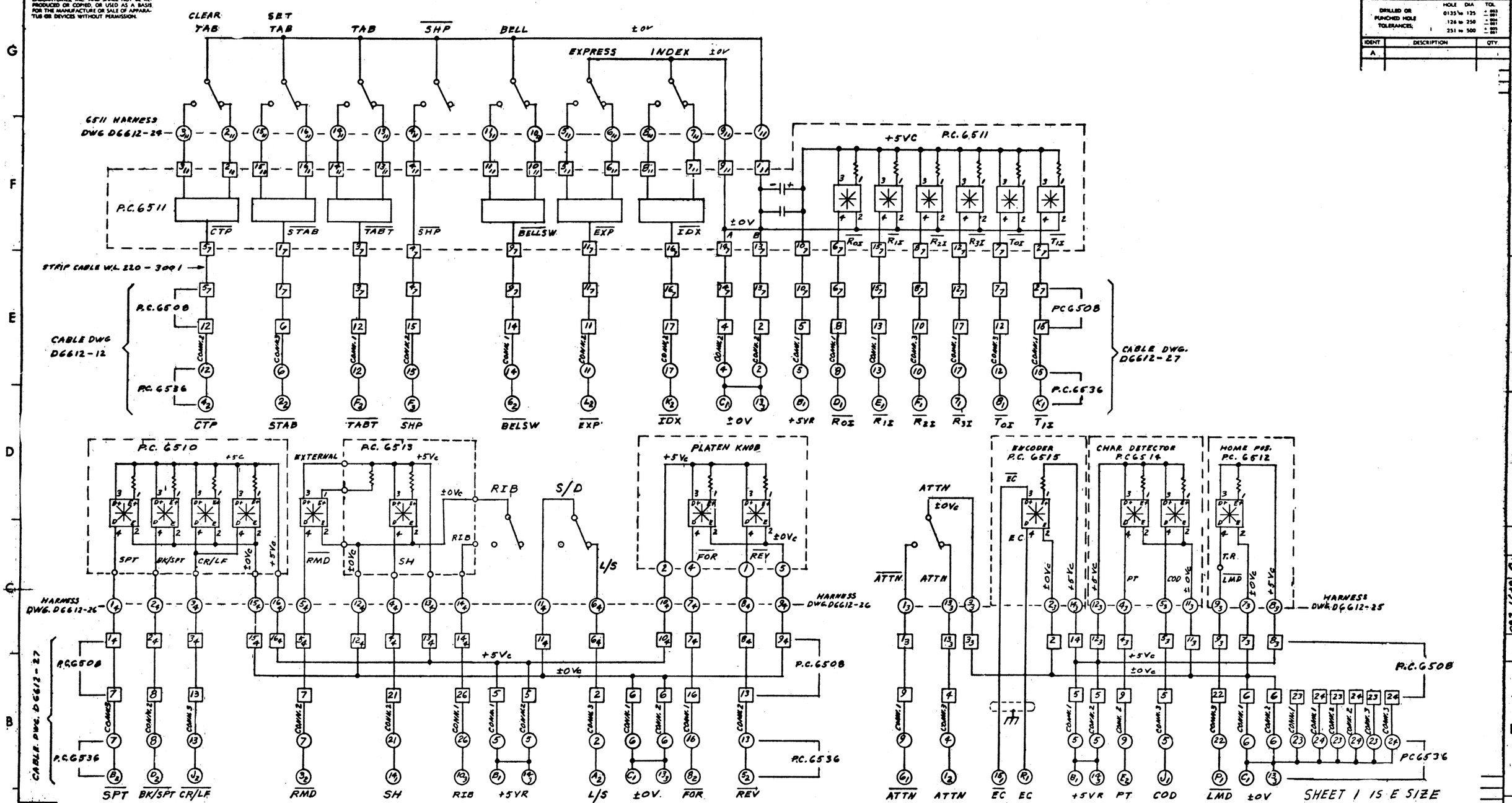

WANG PART NO	ITEM	QTY	NAME
Qty. Per Unit / FIRST USED ON / ASSY USED ON			WANG LABORATORIES, INC. TEWKSBURY, MASS. U.S.A.
			MATERIAL
			MODEL NO. 1222
			SEE ENGRG SPECIFICATIONS No.
			FINISH
			TOL. EX. AS NOTED XX ± .010 FRAC ± 1/64 XXX ± .005 ANG. ± 1°30' FINISH 125
			SCALE / SHT 2 OF 2

MATERIAL	DESCRIPTION			
BY	DATE	APPROVED BY	DATE	
DWN	6/3/74	E ENGR	6-12-74	
CHK		M ENGR		
E C CONTROL		MFG ENGR		

TITLE: SCHEMATIC TYPEWRITER WIRING

WANG PART NUMBER	SIZE	DRAWING NUMBER	REV
	D	6497-260	

REVISION

6497-260